## SLD SYMBOLS

| S.NO | SYMBOL | DESCRIPTION |
|---|---|---|
| 1 | | MINIATURE CIRCUIT BREAKER |
| 2 | | MOULDED CASE CIRCUIT BREAKER |
| 3 | E | AIR CIRCUIT BREAKER - ELECTRICAL DRAW OUT TYPE |
| 4 | CT S1 S2 P1 P2 | CURRENT TRANSFORMER (DUAL RATIO) |
| 5 | | ISOLATION TRANSFORMER |
| 6 | | LED INDICATION LAMP |
| 7 | VSS | VOLTMETER SELECTOR SWITCH |
| 8 | ASS | AMMETER SELECTOR SWITCH |
| 9 | EEM | ELECTRONIC ENERGY METER WITH RS485 COMMUNICATION PORT |
| 10 | LCP | LOCAL CONTROL PANEL |
| 11 | V | DIGITAL TYPE VOLTMETER |
| 12 | A | DIGITAL TYPE AMMETER |
| 13 | | CAPACITOR PANEL |
| 14 | | GROUNDING |
| 15 | E/L | ELECTRICAL INTERLOCK |
| 16 | HPFCR | HYBRID POWER FACTOR CORRECTION RELAY |
| 17 | BMS | BUILDING MANAGEMENT SYSTEM |
| 18 | M | MOTOR / PUMP |
| 19 | | POWER CONTACTOR |
| 20 | | LIGHTING DISTRIBUTION BOARD (LDB) |
| 21 | | EMERGENCY UPS DISTRIBUTION BOARD (EUDB) |
| 22 | | POWER DISTRIBUTION BOARD (PDB) |
| 23 | | UPS DISTRIBUTION BOARD (UDB) |
| 24 | | UNINTERRUPTIBLE POWER SUPPLY |
| 25 | SR | TRIP CIRCUIT SUPERVISION RELAY |
| 26 | SGR | SENSITIVE EARTH FAULT RELAY |
| 27 | MFM | MULTIFUNCTION METER WITH RS485 COMMUNICATION PORT |
| 28 | VFD | VARIABLE FREQUENCY DRIVE |
| 29 | | CABLE SIZES SHALL BE AS PER CABLE SCHEDULE |
| 30 | DOL | DIRECT ON LINE STARTER |
| 31 | | AUTOMANUAL SELECTOR SWITCH |
| 32 | SPP | SINGLE PHASE PROTECTION RELAY |

## BMS MONITOR/COMMAND STATUS

| | |
|---|---|
| BMS | NO/NC POTENTIAL FREE CONTACTS TO BE PROVIDED IN THE PANEL FOR ON/OFF STATUS TRIP STATUS |
| BMS M | NO/NC POTENTIAL FREE CONTACTS TO BE PROVIDED IN THE PANEL FOR ON/OFF STATUS TRIP STATUS VOLTAGE PRESENSE |
| BMS | NO/NC POTENTIAL FREE CONTACTS TO BE PROVIDED IN THE PANEL FOR ON/OFF STATUS TRIP STATUS ON/OFF COMMAND AIR SWITCH |

## INTERLOCK LOGIC FOR EH-1 MAIN LT PANEL

| | ACB-1 | ACB-2 | ACB-3 |
|---|---|---|---|
| CASE-I | ON | ON | OFF |
| CASE-II | OFF | ON | ON |
| CASE-III | ON | OFF | ON |

# ONE/SET POTENTIAL FREE CONTACTS TO BE PROVIDED FOR THE BMS MOBE VENTILATION FAN ON/OFF PANEL

## INDICATION LAMP DETAILS

| INDICATION LAMP | COLOUR |
|---|---|
| ON | GREEN |
| OFF | RED |
| TRIP | AMBER |

ALL THE LCP'S SHALL BE PROVIDED WITH THE BELOW CONFIGURATION

| CABLE ENTRY DETAILS |
|---|
| ENTRY : TOP |
| EXIT : TOP |
| INGRESS PROTECTION (IP) |
| IP: 42 |
| PHASING CONFIGURATION |
| 3Ø, TP - R,Y,B |
| SHORT CIRCUIT RUPTURING CAPACITY |
| 10kA/SEC |

| ELECTRONIC ENERGYMETER (RS485) |
|---|
| 1 CURRENT |
| 2 VOLTAGE |
| 3 REAL POWER |
| 4 REACTIVE POWER |
| 5 APPARENT POWER |
| 6 POWER FACTOR |
| 7 FREQUENCY |

| MULTIFUNCTION METER (RS485) |
|---|
| 1 CURRENT |
| 2 VOLTAGE |
| 3 REAL POWER |
| 4 REACTIVE POWER |
| 5 APPARENT POWER |
| 6 POWER FACTOR |
| 7 FREQUENCY |
| 8 CUMULATIVE MD |

## ABBREVIATIONS

| |
|---|
| 4P - FOUR POLE |
| TPN - TRIPLE POLE & NEUTRAL |
| TP - TRIPLE POLE |
| DP - DOUBLE POLE |
| TCH - TRIP CIRCUIT HEALTHY |

## NOTES

1. MAIN PCC PANEL SHOULD FULFILL THE REQUIREMENTS OF RELEVANT SPECIFICATIONS.
2. CONTROL CIRCUIT VOLTAGE SHALL BE 240V AC UNLESS SPECIFIED.
3. ALL EQUIPMENTS & PANELS ARE DOUBLE EARTHED WITH ADEQUATE SIZE OF G.I. STRIPS (BODY EARTHING).
4. ALL CABLES ARE ARMOURED CABLES UNLESS OTHERWISE SPECIFIED.
5. ALL THE FEEDERS SHALL BE LABELLED WITH FEEDER IDENTIFICATION.
6. THIS SLD SHOULD BE READ IN CONJUNCTION WITH RELEVANT TECHNICAL SPECIFICATION, RESPECTIVE FLOOR LAYOUTS & EARTHING LAYOUT.
7. ALL BUSSUCTRIBING MAINS SHALL BE OF SANDWICH CONSTRUCTION IT SHALL BE POSSIBLE TO MOUNT THE BUSBAR SYSTEM IN ANY ORIENTATION WITHOUT AFFECTING THE CURRENT RATING.
8. EARTHING SHALL BE CARRIED OUT AS PER IS 3043 / 2016.
9. HPFC CT AND CONTROLLER SHALL BE PROVIDED TO CONTROL / SENSING THE CAPACITOR BANK UNDER EACH BUS SECTION ONLY IN MAIN LT PANEL. THESE DETAILS ARE SUBJECT TO CHANGE DURING DETAIL ENGINEERING BASED ON VENDOR DETAILS.
10. CIRCUIT BREAKER FOR MOTOR FEEDER IS DESIGNED BASED ON TYPE 2 COORDINATION CHART. THE FINAL RATING SHALL BE DECIDED BASED ON SELECTED VENDOR COORDINATION CHART.
11. STAR DELTA STARTER IS PROVIDED FOR 7.5KW/MOTOR RATING AND ABOVE. LESS THAN 7.5KW MOTOR RATING IS PROVIDED WITH DOL STARTER.
12. 2KUNS OF 3C CABLE TO BE PROVIDED FROM SUD STARTER TO PUMP AND SINGLE RUN TO BE PROVIDED FOR DOL STARTER TO PUMP.
13. DOL STAR DELTA CONTACT RATING SHALL BE PROVIDED AS PER THE TYPE 2 COORDINATION CHART.
14. FOR MOTOR AND PUMP PANELS, TP BREAKER & BUSBARS SHALL BE PROVIDED.
15. ALL LT PANELS - IN ALL OUTGOINGS ON OFF & TRIP LED INDICATION LAMPS SHALL BE PROVIDED.
16. THE BUS BARS SHALL BE OF SUFFICIENT CROSS SECTION SO THAT A CURRENT DENSITY OF 0.9A/SQ.MM IS NOT EXCEEDED AT NOMINAL CURRENT RATING FOR ALUMINIUM BUS BARS, 1.0A/SQ.MM FOR COPPER BUS BARS.
17. MCCBS SHOULD BE SUITABLE FOR IC/ICS RATINGS.
18. 2 NOS 20 X 3 MM COPPER STRIP FOR LT PANEL UP TO 400 AMP AND 25 X 5 MM COPPER STRIP FOR LT PANEL OF HIGHER CAPACITY SHALL BE PROVIDED INSIDE THE PANELS.
19. ALL INCOMING AIR CIRCUIT BREAKERS (ACBS) SHALL BE OF ELECTRICALLY OPERATED DRAW -OUT TYPE (EDO) ENCASED IN METAL CLAD HOUSINGS AND OUTGOING SHALL BE MDO TYPE.
20. CABLE LENGTHS SHALL BE AS PER ACTUAL SITE MEASUREMENT.
21. IN THE ACB ALL INCOMER AND OUTGOING FEEDERS SHALL BE PROVIDED WITH VARIABLE MICROPROCESSOR BASED RELEASES FOR OVERLOADS), SHORT CIRCUIT(S), INSTANTANEOUS(I) AND EARTH FAULT PROTECTION.
22. ALL THE STARTERS SHALL BE PROVIDED WITH CONTACTORS & RELAYS.
23. DUAL RATIO RANGE MENTIONED IN THE SLD ARE INDICATIVE, IT SHALL BE AS PER THE FINALIZED CT MANUFACTURES AS PER PANEL SUPPLIER.
24. UPS/ EMERGENCY LIGHTING: ELV UPS UNDER NORMAL CONDITION , BOTH UPS SHALL SHARE THE LOADS AND IN CASE ONE UPS FAILS OTHER UPS SHALL FEED THE COMPLETE LOAD WITHOUT INTERRUPTION.
25. REFER EQUIPMENT & CABLE TRAY LAYOUT FOR LCP LOCATIONS.
26. REFER CABLE SCHEDULE FOR LCP INCOMING & OUTGOING FEEDERS.

HYBRID POWER FACTOR CONTROLLER PANELS AND ITS SCHEME SHALL BE SUBMITTED ALONG WITH THE VENDOR TECHNICAL SUBMITTALS AS IT WILL VARY BASED ON VENDORS. WE HEREBY CONFIRM THAT WE HAVE SELECTED AND INDICATED THE MAXIMUM HPFC RATING THAT WOULD BE REQUIRED FOR 2000 KVA TRANSFORMER, BREAKERS AND CABLES INDICATED IN THE SLD ARE SUFFICIENT FOR THE HPFC PANEL

SHORT CIRCUIT BREAKING CAPACITY OF ALL ACB's SHALL BE OF 65kA/50kA

ALL MCCB'S WITH RATINGS UPTO AND INCLUDING 200A SHALL BE EQUIPPED WITH THERMAL MAGNETIC RELEASE.

ALL MCCB'S WITH RATINGS 250A AND ABOVE SHALL HAVE MICROPROCESSOR BASED RELEASE WITH ADJUSTABLE LONG TIME AND ADJUSTABLE SHORT TIME PROTECTION

## REFERENCE DRAWINGS

1. EH-1- SUB STATION -EARTHING SCHEMATIC DRAWING, REFER DWG. NO. O17203-E-SP-30-EG-0204
2. EH-1- SUB STATION - LOAD ESTIMATION REFER DOCUMENT NO. 017203-E-SP-30-DC-0209
3. EH-1- SUB STATION - HPFC CALCULATION REFER DOCUMENT NO. O17203-E-SP-30-DC-0218
4. EH-1- SUB STATION - UPS CALCULATION REFER DOCUMENT NO. O17203-E-SP-30-DC-0231
5. EH-1- SUB STATION - CABLE SCHEDULE REFER DOCUMENT NO. O17203-E-SP-30-DC-0214
6. EH-1- SUB STATION - SC CALCULATION REFER DOCUMENT NO. O17203-E-SP-30-DC-0216

| REV | DESCRIPTION | DATE | DSGN | DRWN | CHKD | APPD |
|---|---|---|---|---|---|---|
| R0 | ISSUED AS GOOD FOR CONSTRUCTION | 8.11.23 | MG | TVS | MK | RAA |

Revisions

| | | | |
|---|---|---|---|
| ARCHITECTURE | | FIRE | |
| STRUCTURAL | | PIPING | |
| ELECTRICAL | | FIRE | |
| ELV SYSTEM | | GIS | |
| HVAC | | GEOTECH | |
| CHECKED BY | SIGN | DATE | CHECKED BY | SIGN | DATE |

EPC Contractor
L&T Construction
Buildings & Factories

JOB No : O17203

Project Name
DESIGN AND CONSTRUCTION OF INDIA INTERNATIONAL CONVENTION & EXPO CENTRE
SECTOR 25, DWARKA, NEW DELHI, INDIA

Drawing Status
GOOD FOR CONSTRUCTION (GFC)

| Drawing No | | | Rev. No |
|---|---|---|---|
| E | 30 | 0227 | R0 |

Title :
EXHIBITION HALL-I
MASTER SINGLE LINE DIAGRAM -3/3

EDRC DWG No : O17203-E-SP-30-1L-0227
Scale : NTS
Sheet size : A0

Owner / Employer
India International Convention & Exhibition Centre Limited
Room No. 452A, Ministry of Commerce & Industry, DPIIT, Udyog Bhawan, New Delhi - 110011, India
Department of Industrial Policy and Promotion Ministry of Commerce & Industry Government of India

Knowledge Partner
Delhi Mumbai Industrial Corridor Development Corporation
Room No. 345 B, 3rd Floor Rail Ashok, Diplomatic Enclave, 508 Chanakyapuri, New Delhi - 110021

Employer's Representative
Employer's Engineer
Programme Management Consultant (PMC)
AECOM

Preliminary Engineering Architecture Consultants (PEAC)
idom
Av. Del Manzanillo de El Escorial, 4, 28047 Madrid, Spain
CPKUKREJA ARCHITECTS
No.D-1, Ashirwad Building, Green Park, New Delhi, Delhi 110016, India

EPC Contractor
L&T Construction
Buildings & Factories
Mount Poonamallee Road, Manapakkam, P.B.No.979, Chennai - 600 089

EPC Contractor's Representatives
Design Consultant
Engineering Design and Research Center (EDRC)
L&T Construction - Buildings & Factories

Architectural Consultant
ARCOP
Arcop Associates Pvt. Ltd.
A-13, Panipose Enclave , G.K.-I New Delhi, Delhi 110048, India

Structural Proof Consultant
Indian Institute of Technology (IIT) Madras
Sardar Patel Rd, Opposite to C. L.R.I. Adyar, Chennai, Tamil Nadu 600036

MEP Proof Consultant
egis
Egis India Consulting Engineers Pvt. Ltd.
Plot No. 66, Sector 32, Institutional Area, Opp: Zenotte Solutions, Gurugram, Haryana 122001

ICT Proof Consultant
CKR II Consulting
No. No.411, 3rd Floor, Narayana Arcade, Subbaramachetty Road, Nettlallappa Circle, Basavanagudi, Bengaluru - 560004

Certification
EPC Contractor
Design Consultant
Architectural Consultant
Proof Consultant
Structural
MEP
ICT
Reviewed GFC drawing prepared by Contractor and proceed that all comments are incorporated
PEAC
Issued by:
Employer / Employer's Engineer

This drawing is the property of L&T Construction, L&T-EDRC and must not be passed on to any person or body nor authorised by us to reveal it nor be copied or otherwise made use either in full or in part to such person or body without prior permission in writing.

## SLD SYMBOLS

| S.NO | SYMBOL | DESCRIPTION |
|---|---|---|
| 1 | | MINIATURE CIRCUIT BREAKER |
| 2 | | MOULDED CASE CIRCUIT BREAKER |
| 3 | | AIR CIRCUIT BREAKER - ELECTRICAL DRAW OUT TYPE |
| 4 | | CURRENT TRANSFORMER (DUAL RATIO) |
| 5 | | ISOLATION TRANSFORMER |
| 6 | | LED INDICATION LAMP |
| 7 | VSS | VOLTMETER SELECTOR SWITCH |
| 8 | ASS | AMMETER SELECTOR SWITCH |
| 9 | EEM | ELECTRONIC ENERGY METER WITH RS485 COMMUNICATION PORT |
| 10 | LCP | LOCAL CONTROL PANEL |
| 11 | V | DIGITAL TYPE VOLTMETER |
| 12 | A | DIGITAL TYPE AMMETER |
| 13 | | CAPACITOR PANEL |
| 14 | | GROUNDING |
| 15 | EIL | ELECTRICAL INTERLOCK |
| 16 | HPFCR | HYBRID POWER FACTOR CORRECTION RELAY |
| 17 | BMS | BUILDING MANAGEMENT SYSTEM |
| 18 | M | MOTOR / PUMP |
| 19 | | POWER CONTACTOR |
| 20 | | LIGHTING DISTRIBUTION BOARD (LDB) |
| 21 | | EMERGENCY UPS DISTRIBUTION BOARD (EUDB) |
| 22 | | POWER DISTRIBUTION BOARD (PDB) |
| 23 | | UPS DISTRIBUTION BOARD (UDB) |
| 24 | | UNINTERRUPTIBLE POWER SUPPLY |
| 25 | SS | TRIP CIRCUIT SUPERVISION RELAY |
| 26 | GQ | SENSITIVE EARTH FAULT RELAY |
| 27 | MFM | MULTIFUNCTION METER WITH RS485 COMMUNICATION PORT |
| 28 | VFD | VARIABLE FREQUENCY DRIVE |
| 29 | | CABLE SIZES SHALL BE AS PER CABLE SCHEDULE |
| 30 | DOL | DIRECT ON LINE STARTER |
| 31 | | AUTOMANUAL SELECTOR SWITCH |
| 32 | SPP | SINGLE PHASE PROTECTION RELAY |

## NOTES

1. MAIN PCC PANEL SHOULD FULFILL THE REQUIREMENTS OF RELEVANT SPECIFICATIONS.
2. CONTROL CIRCUIT VOLTAGE SHALL BE 240V AC UNLESS SPECIFIED.
3. ALL EQUIPMENTS & PANELS ARE DOUBLE EARTHED WITH ADEQUATE SIZE OF G.I. STRIPS (BODY EARTHING)
4. ALL CABLES ARE ARMOURED CABLES UNLESS OTHERWISE SPECIFIED.
5. ALL THE FEEDERS SHALL BE LABELLED WITH FEEDER IDENTIFICATION.
6. THIS SLD SHOULD BE READ IN CONJUNCTION WITH RELEVANT TECHNICAL SPECIFICATION, RESPECTIVE FLOOR LAYOUTS & EARTHING LAYOUT.
7. ALL BUSDUCT RISING MAINS SHALL BE OF SANDWICH CONSTRUCTION IT SHALL BE POSSIBLE TO MOUNT THE BUSBAR SYSTEM IN ANY ORIENTATION WITHOUT AFFECTING THE CURRENT RATING.
8. EARTHING SHALL BE CARRIED OUT AS PER IS 3043 / 2016.
9. HPFC CT AND CONTROLLER SHALL BE PROVIDED TO CONTROL / SENSING THE CAPACITOR BANK UNDER EACH BUS SECTION ONLY IN MAIN LT PANEL. THESE DETAILS ARE SUBJECT TO CHANGE DURING DETAIL ENGINEERING BASED ON VENDOR DETAILS
10. CIRCUIT BREAKER FOR MOTOR FEEDERS IS DESIGNED BASED ON TYPE 2 COORDINATION CHART. THE FINAL RATING SHALL BE DECIDED BASED ON SELECTED VENDOR COORDINATION CHART.
11. STAR DELTA STARTER IS PROVIDED FOR 7.5KW MOTOR RATING AND ABOVE. LESS THAN 7.5KW MOTOR RATING IS PROVIDED WITH DOL STARTER
12. 2RUNS OF 3C CABLE TO BE PROVIDED FROM DOL STARTER TO PUMP AND SINGLE RUN TO BE PROVIDED FOR DOL STARTER TO PUMP
13. DOL STAR DELTA CONTACT RATING SHALL BE PROVIDED AS PER THE TYPE 2 COORDINATION CHART.
14. FOR MOTOR AND PUMP PANELS, TP BREAKER & BUSBARS SHALL BE PROVIDED.
15. ALL LT PANELS - IN ALL OUTGOINGS ON, OFF & TRIP LED INDICATION LAMPS SHALL BE PROVIDED.
16. THE BUS BARS SHALL BE OF SUFFICIENT CROSS SECTION SO THAT A CURRENT DENSITY OF 0.8A/SQ.MM IS NOT EXCEEDED AT NOMINAL CURRENT RATING FOR ALUMINIUM BUS BARS, 1.5A/SQ.MM FOR COPPER BUS BARS.
17. MCCBS SHOULD BE SUITABLE FOR ICU=ICS RATINGS.
18. 2 NOS 20 X 3 MM COPPER STRIP FOR LT PANEL UP TO 400 AMP AND 25 X 5 MM COPPER STRIP FOR LT PANEL OF HIGHER CAPACITY SHALL BE PROVIDED INSIDE THE PANELS.
19. ALL INCOMING AIR CIRCUIT BREAKERS (ACBS) SHALL BE OF ELECTRICALLY OPERATED DRAW -OUT TYPE (EDO) ENCASED IN METAL CLAD HOUSINGS AND OUTGOING SHALL BE MDO TYPE.
20. CABLE LENGTHS SHALL BE AS PER ACTUAL SITE MEASUREMENT.
21. IN THE ACB ALL INCOMER AND OUTGOING FEEDERS SHALL BE PROVIDED WITH VARIABLE MICROPROCESSOR BASED RELEASES FOR OVERLOADS, SHORT CIRCUIT(S), INSTANTANEOUS(I) AND EARTH FAULT PROTECTION.
22. ALL THE STARTERS SHALL BE PROVIDED WITH CONTACTORS & RELAYS.
23. DUAL RATIO RANGE MENTIONED IN THE SLD ARE INDICATIVE, IT SHALL BE AS PER THE FINALIZED CT MANUFACTURES AS PER PANEL SUPPLIER.
24. UPS/ EMERGENCY LIGHTING IELV UPS UNDER NORMAL CONDITION , BOTH UPS SHALL SHARE THE LOADS AND IN CASE ONE UPS FAILS OTHER UPS SHALL FEED THE COMPLETE LOAD WITHOUT INTERRUPTION.
25. REFER EQUIPMENT & CABLE TRAY LAYOUT FOR LCP LOCATIONS.
26. REFER CABLE SCHEDULE FOR LCP INCOMING & OUTGOING FEEDERS.

HYBRID POWER FACTOR CONTROLLER PANELS AND ITS SCHEME SHALL BE SUBMITTED ALONG WITH THE VENDOR TECHNICAL SUBMITTALS AS IT WILL VARY BASED ON VENDORS. WE HEREBY CONFIRM THAT WE HAVE SELECTED AND INDICATED THE MAXIMUM HPFC RATING THAT WOULD BE REQUIRED FOR 2500 KVA TRANSFORMER, BREAKERS AND CABLES INDICATED IN THE SLD ARE SUFFICIENT FOR THE HPFC PANEL

SHORT CIRCUIT BREAKING CAPACITY OF ALL ACBS SHALL BE 50ka=Ics=Ics

ALL MCCBS WITH RATINGS UPTO AND INCLUDING 200A SHALL BE EQUIPPED WITH THERMAL MAGNETIC RELEASE.

ALL MCCBS WITH RATINGS 250A AND ABOVE SHALL HAVE MICROPROCESSOR BASED RELEASE WITH ADJUSTABLE LONG TIME AND ADJUSTABLE SHORT TIME PROTECTION

## REFERENCE DRAWINGS

1. EH-2- SUB STATION -EARTHING SCHEMATIC DRAWING, REFER DWG. NO. O17203-E-SP-30-EG-0250
2. EH-2- SUB STATION - LOAD ESTIMATION REFER DOCUMENT NO. O17203-E-SP-30-DC-0232
3. EH-2- SUB STATION - HPFC CALCULATION REFER DOCUMENT NO. O17203-E-SP-30-DC-0226
4. EH-2- SUB STATION - UPS CALCULATION REFER DOCUMENT NO. O17203-E-SP-30-DC-0233
5. EH-2- SUB STATION - CABLE SCHEDULE REFER DOCUMENT NO. O17203-E-SP-30-DC-0222
6. EH-2- SUB STATION - SC CALCULATION REFER DOCUMENT NO. O17203-E-SP-30-DC-0224

## BMS MONITOR/COMMAND STATUS

| | |
|---|---|
| BMS | NO/NC POTENTIAL FREE CONTACTS TO BE PROVIDED IN THE PANEL FOR ON/OFF STATUS TRIP STATUS |
| BMS | NO/NC POTENTIAL FREE CONTACTS TO BE PROVIDED IN THE PANEL FOR ON/OFF STATUS TRIP STATUS VOLTAGE PRESENSE |
| BMS | NO/NC POTENTIAL FREE CONTACTS TO BE PROVIDED IN THE PANEL FOR ON/OFF STATUS TRIP STATUS ON/OFF COMMAND A/M SWITCH |

## INTERLOCK LOGIC FOR EH-2 MAIN LT PANEL

| | ACB-1 | ACB-2 | ACB-3 |
|---|---|---|---|
| CASE-I | ON | ON | OFF |
| CASE-II | OFF | ON | ON |
| CASE-III | ON | OFF | ON |

# ONE SET POTENTIAL FREE CONTACTS TO BE PROVIDED FOR EACH FIRE MODE VENTILATION FAN IN LCP/PANEL

## INDICATION LAMP DETAILS

| INDICATION LAMP | COLOUR |
|---|---|
| ON | GREEN |
| OFF | RED |
| TRIP | AMBER |

ALL THE LCP'S SHALL BE PROVIDED WITH THE BELOW CONFIGURATION

| |
|---|
| CABLE ENTRY DETAILS |
| ENTRY: TOP |
| EXIT : TOP |
| INGRESS PROTECTION (IP) |
| IP: 42 |
| PHASING CONFIGURATION |
| 3Ø, TP+N,Y,B |
| SHORT CIRCUIT RUPTURING CAPACITY |
| 50kA/SEC |

| ELECTRONIC ENERGY METER (RS485) | |
|---|---|
| 1 | CURRENT |
| 2 | VOLTAGE |
| 3 | REAL POWER |
| 4 | REACTIVE POWER |
| 5 | APPARENT POWER |
| 6 | POWER FACTOR |
| 7 | FREQUENCY |

| MULTIFUNCTION METER (RS485) | |
|---|---|
| 1 | CURRENT |
| 2 | VOLTAGE |
| 3 | REAL POWER |
| 4 | REACTIVE POWER |
| 5 | APPARENT POWER |
| 6 | POWER FACTOR |
| 7 | FREQUENCY |
| 8 | CUMULATIVE MD |

## ABBREVIATIONS

| |
|---|
| 4P - FOUR POLE |
| TPN - TRIPLE POLE & NEUTRAL |
| TP - TRIPLE POLE |
| DP - DOUBLE POLE |
| TCR - TRIP CIRCUIT HEALTHY |

Owner / Employer
India International Convention & Exhibition Centre Limited
Room No.-453A, Ministry of Commerce & Industry, DPII, Udyog Bhawan, New Delhi - 110011, India
Department of Industrial Policy and Promotion Ministry of Commerce & Industry Government of India

Knowledge Partner
DMICDC Delhi Mumbai Industrial Corridor Development Corporation
Room No 341 & 3rd Floor Hotel Ashok, Diplomatic Enclave, 50B Chanakyapuri, New Delhi - 110021

Employer's Representative
Employer's Engineer
Programme Management Consultant (PMC)
AECOM

Preliminary Engineering Architecture Consultants (PEAC)
idom
Av. Del Manzanillo de El Escorial, 4, 28040 Madrid, Spain
CPKUKREJA ARCHITECTS
No-D-1, Abhiheet Building, Green Park, New Delhi, Delhi 110016, India

EPC Contractor
L&T Construction
Buildings & Factories
Mount Poonamallee Road, Manapakkam, P.B.No.979, Chennai - 600 089

Design Consultant - Representatives
Design Consultant
Engineering Design and Research Center (EDRC)
L&T Construction - Buildings & Factories

Architectural Consultant
ARCOP
Arcop Associates Pvt. Ltd.
A-13, Pamposh Enclave , G.K.-I
New Delhi, Delhi 110048, India

Structural Proof Consultant
Indian Institute of Technology (IIT) Madras
Sardar Patel Rd, Opposite to C.L.R.I. Adyar, Chennai, Tamil Nadu 600036

MEP Proof Consultant
egis
Egis India Consulting Engineers Pvt. Ltd.
Plot No. 6a, Sector 32, Institutional Area, Opp: Zenotfo Solutions, Gurugram, Haryana 122001

ICT Proof Consultant
CKR
CKR IT Consulting
Bld. No.4777, 3rd Floor, Narayana Arcade, Subbaramashetty Road, Hathaliaya Circle, Basavanagudi, Bengaluru - 560004

Certification
EPC Contractor
Design Consultant
Architectural Consultant
Proof Consultant
Structural
MEP
ICT
PEAC
Reviewed & approved drawing prepared by contractor parameters have been achieved as per specification and codes
Issued by:
Employer / Employer's Engineer

| REV | DESCRIPTION | DATE | DSGN | DRWN | CHKD | APPD |
|---|---|---|---|---|---|---|
| R0 | ISSUED AS GOOD FOR CONSTRUCTION | 18.11.20 | MG | TVS | MK | RKA |

Revisions

| | | | |
|---|---|---|---|
| ARCHITECTURE | | EPI | |
| STRUCTURAL | | PIPING | |
| ELECTRICAL | | FHE | |
| B/V SYSTEM | | C&I | |
| HVAC | | GEOTECH | |
| CHECKED BY | SIGN / DATE | CHECKED BY | SIGN / DATE |

EPC Contractor
L&T Construction Buildings & Factories
JOB No : O17203
Project Name
DESIGN AND CONSTRUCTION OF INDIA INTERNATIONAL CONVENTION & EXPO CENTRE
SECTOR 25, DWARKA, NEW DELHI, INDIA
Drawing Status
GOOD FOR CONSTRUCTION [GFC]

| Drawing No | | | Rev. No |
|---|---|---|---|
| E | 30 | 0229 | R0 |

Title :
EXHIBITION HALL-2
MASTER SINGLE LINE DIAGRAM-3/3

EDRC DWG No : O17203-E-SP-30-1L-0229
Scale : NTS
Sheet Size A0

This drawing is the property of L&T Construction, E&I-EDRC and must not be passed on to any person or body not authorised by us to receive it nor be used or otherwise made use of for L&T or a party to whom permission is validly granted in writing.

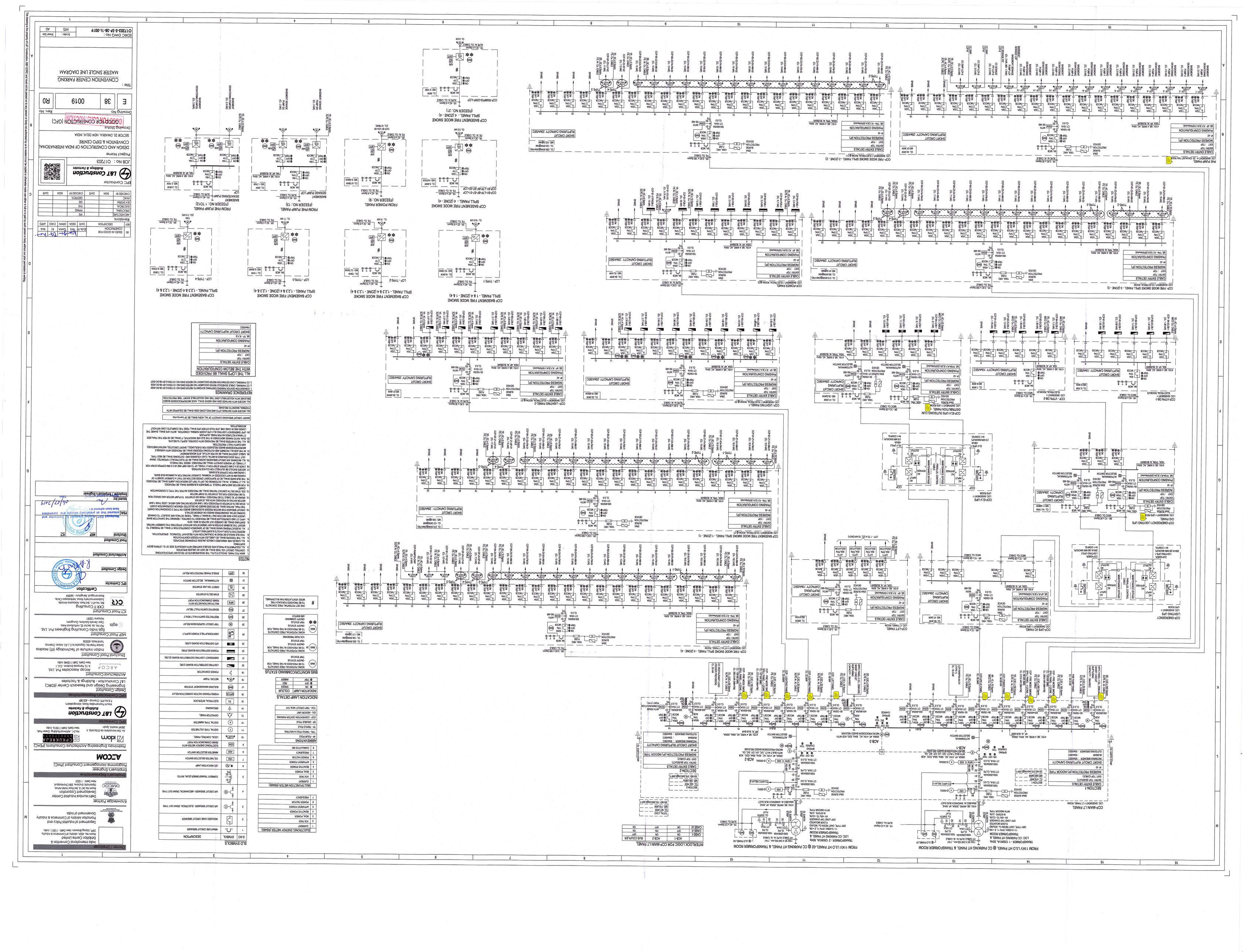
CONVENTION CENTER PARKING
MASTER SINGLE LINE DIAGRAM
Title :
PROJECT NO: 01/2023
Drawing status
CONSTRUCTION (CFC)
Drawing No
E 38 0019 R0
Rev. No
Project name
CONVENTION & EXPO CENTRE
DESIGN AND CONSTRUCTION OF INDIA INTERNATIONAL
SECTOR 25, DWARKA, NEW DELHI, INDIA
JOB NO : 01/2023
L&T Construction
Buildings & Factories
EPC Contractor
REVISIONS
REV DESCRIPTION DATE DSGN DWN CHD APD
R0 ISSUED AS GOOD FOR CONSTRUCTION 30.04.19 NIS DWN R1 R2 R3
ELECTRICAL
PLUMBING
HVAC
FIRE
FIRFO
GS
EEY
CHECKED BY SIGN DATE CHECKED BY SIGN DATE
Consultant
Structural Consultant
Indian Institute of Technology (III) Andhra
Structural Consultant
Acoustical Consultant
Acoustics & Vibration Solutions (A.V.S.)
Acoustical Consultant
Acoustics Associates P.vt. Ltd.
Acoustical Consultant
Design Consultant
L&T Construction - Buildings & Factories
Integrated Design and Research Center (IDRC)
Design Consultant
Preliminary Engineering Architecture Consultants (PEAC)
Architect
Engineer's Engineer
Engineer's Engineer
Project Management Consultant (PMC)
Project Management Consultant
Knowledge Partner
Delhi Municipal Publicity Corporation
Knowledge Partner
Department of Industrial Policy and Promotion Ministry of Commerce & Industry, Government of India
Owner / Employer
Issued for Construction
Issued for Construction
Issued for Construction

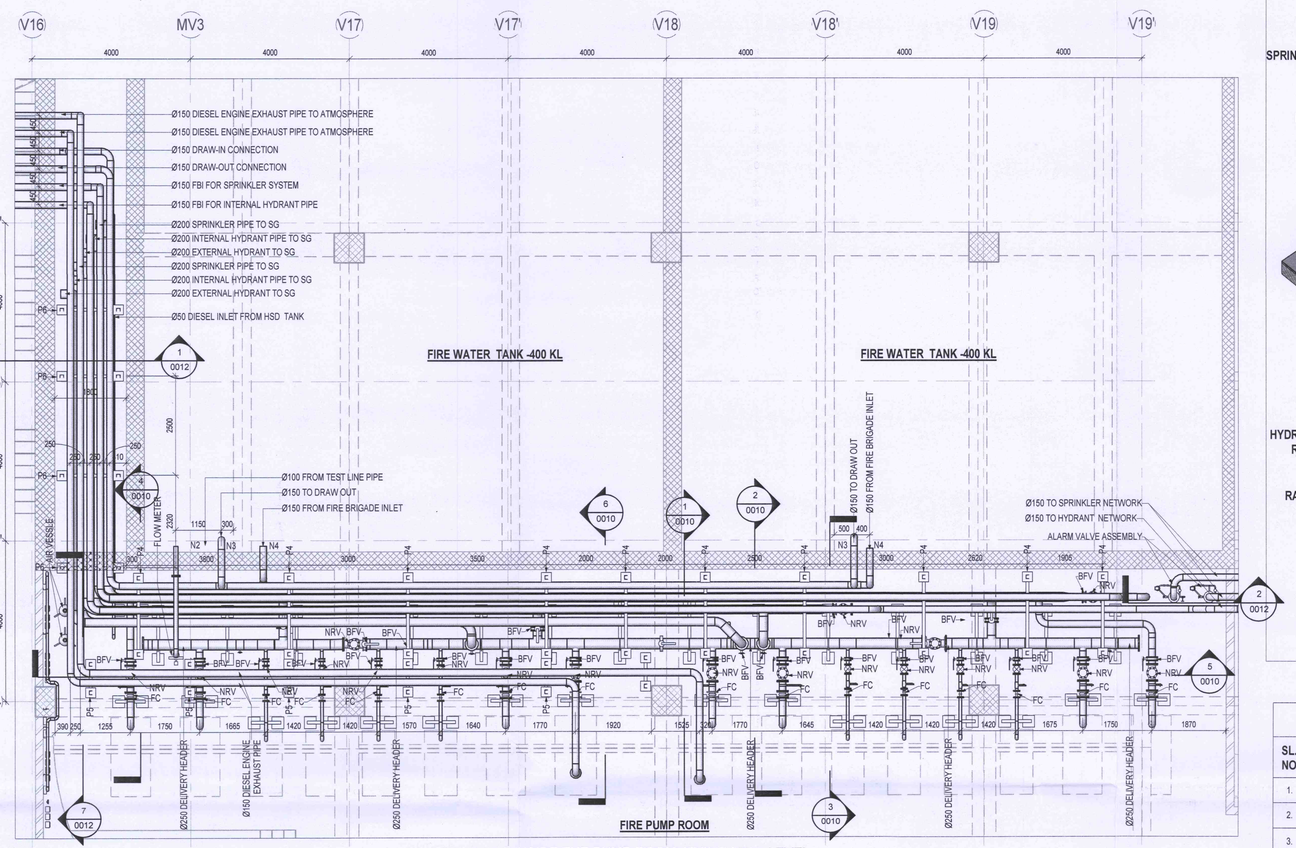


LAYOUT OF PIPING INSIDE THE PUMP ROOM ABOVE 2Mtrs LEVEL

SCALE - 1 : 75

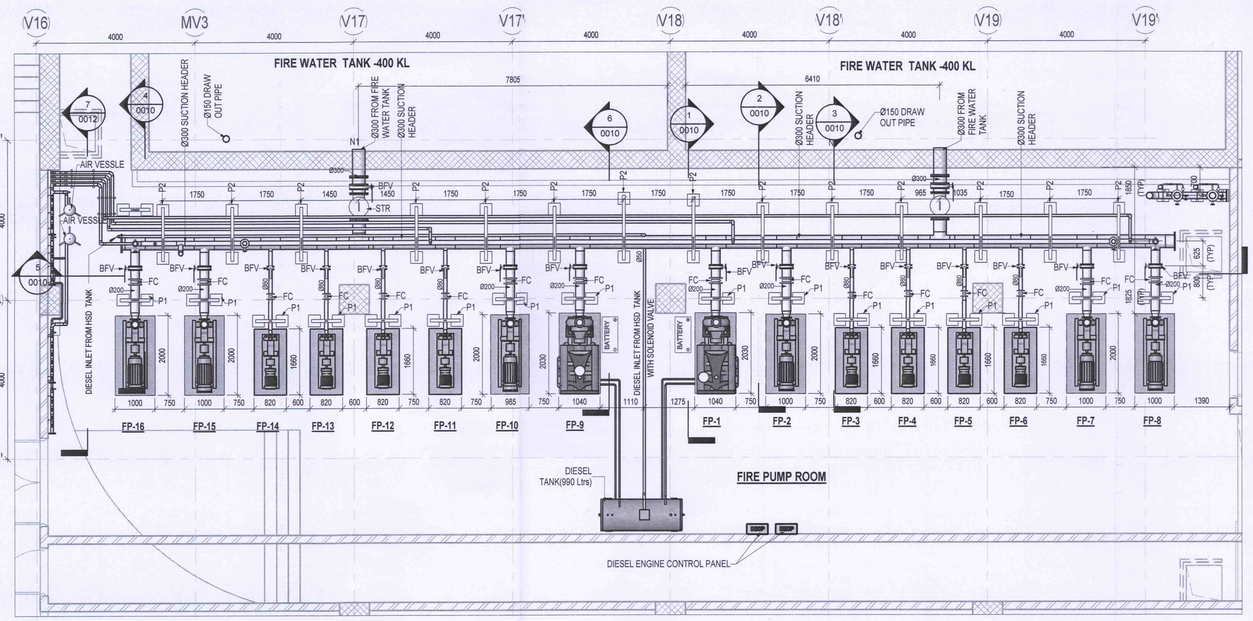


LAYOUT OF PIPING INSIDE THE PUMP ROOM BELOW 2Mtrs LEVEL

SCALE - 1 : 75

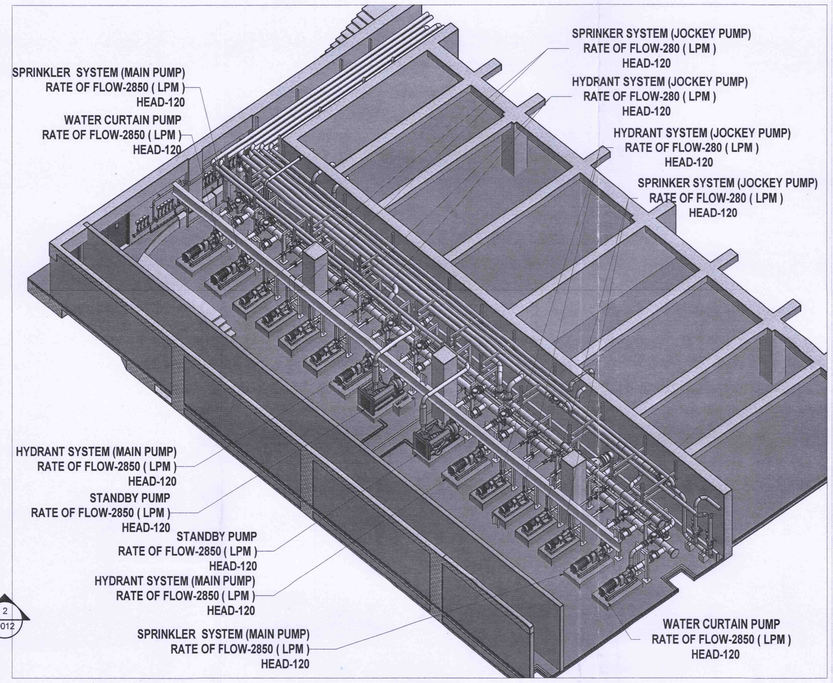


## PUMPS SCHEDULE

| SL. NO. | PUMP NO. | DESCRIPTION | SERVICE | RATE OF FLOW ( LPM ) | HEAD (MWC) | TYPE | DRIVE |
|---|---|---|---|---|---|---|---|
| 1. | FP-1/9 | COMMON STANDBY PUMP | COMMON FOR HYDRANT & SPRINKLER SYSTEM | 2850 | 120 | HORIZONTAL CENTRIFUGAL END SUCTION TYPE | DIESEL ENGINE |
| 2. | FP-2/10 | MAIN PUMP | HYDRANT SYSTEM | 2850 | 120 | HORIZONTAL CENTRIFUGAL END SUCTION TYPE | MOTOR |
| 3. | FP-3/4/11/12 | JOCKEY PUMP | HYDRANT SYSTEM | 280 | 120 | HORIZONTAL CENTRIFUGAL END SUCTION TYPE | MOTOR |
| 4. | FP-5/6/13/14 | JOCKEY PUMP | SPRINKLER SYSTEM | 280 | 120 | HORIZONTAL CENTRIFUGAL END SUCTION TYPE | MOTOR |
| 5. | FP-7/15 | MAIN PUMP | SPRINKLER SYSTEM | 2850 | 120 | HORIZONTAL CENTRIFUGAL END SUCTION TYPE | MOTOR |
| 6. | FP-8/16 | MAIN PUMP | WATER CURTAIN SYSTEM | 2850 | 120 | HORIZONTAL CENTRIFUGAL END SUCTION TYPE | MOTOR |

## SEQUENCE OF OPERATION FOR FIRE PUMPS

| SL. NO. | PUMP NO. | PUMP DESCRIPTION | START PRESSURE | STOP PRESSURE | PRESSURE SWITCH TAG NO. | MODE OF START | MODE OF STOP |
|---|---|---|---|---|---|---|---|
| 1. | FP-1/9 | COMMON STANDBY PUMP | 6 BAR | -- | PS-101 | AUTOMATIC | MANUAL |
| 2. | FP-2/10 | HYDRANT SYSTEM (MAIN PUMP) | 9 BAR | -- | PS-102 | AUTOMATIC | MANUAL |
| 3. | FP-3/4/11/12 | HYDRANT SYSTEM (JOCKEY PUMP) | 11 BAR | 12 BAR | PS-103 | AUTOMATIC | AUTOMATIC |
| 4. | FP-5/6/13/14 | SPRINKLER SYSTEM (JOCKEY PUMP) | 10 BAR | 12 BAR | PS-104 | AUTOMATIC | AUTOMATIC |
| 5. | FP-7/15 | SPRINKLER SYSTEM (MAIN PUMP) | 8 BAR | -- | PS-104 | AUTOMATIC | MANUAL |
| 6. | FP-8/16 | WATERCURTAIN PUMP | AT THE TIME OF WATER CURTAIN SYSTEM OPERATES | | | AUTOMATIC | MANUAL |

## SCHEDULE OF PUDDLE FLANGES

| SL. NO. | SLEEVE NO | DESCRIPTION OF PUDDLE FLANGE | PIPE SIZE | QTY | CENTRE OF SLEEVE (-4500 AS 0.0000) |
|---|---|---|---|---|---|
| 1. | N1 | SUCTION HEADER | 300MM | 02 | +750 |
| 2. | N2 | TEST LINE | 100MM | 02 | +3800 |
| 3. | N3 | DRAW OUT CONNECTION | 150MM | 02 | +3850 |
| 4. | N4 | DRAW IN CONNECTION | 150MM | 02 | +3550 |

## LEGEND:-

| SL. NO. | SYMBOL | DESCRIPTION |
|---|---|---|
| 1 | | ABOVE GROUND PIPING |
| 2 | FC | FLEXIBLE CONNECTION |
| 3 | NRV | NON RETURN VALVE |
| 4 | GV | GLOBE VALVE |
| 5 | BFV | BUTTERFLY VALVE |
| 6 | BFV (NC) | BUTTERFLY VALVE (NORMALLY CLOSED) |
| 7 | STR | BUCKET TYPE STRAINER |
| 8 | PG | PRESSURE GAUGE |
| 9 | PS | PRESSURE SWITCH |
| 10 | AV | AIR VESSEL (PRESSURE VESSEL) |
| 11 | ARV | AIR RELEASE VALVE |
| 12 | DECP | DIESEL ENGINE CONTROL PANEL |

## NOTES:-

1. THE FIRE WATER SYSTEM IS DESIGNED AS PER NBC-PART IV 2016 AND RELEVANT INDIAN STANDARDS
2. POSITIVE SUCTION PUMPING ARRANGEMENT IS CONSIDERED
3. ALL VALVES SHALL BE LOCK OPEN POSITION EXCEPT DRAIN VALES AND TEST LINE VALVES

Key Plan

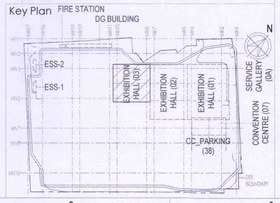


Owner / Employer

India International Convention & Exhibition Centre Limited
Room No. 452A, Ministry of Commerce & industry, DIPP, Udyog Bhawan, New Delhi - 110011, India

Department of Industrial Policy and Promotion Ministry of Commerce & Industry Government of India

Knowledge Partner

Delhi Mumbai Industrial Corridor Development Corporation
Room No 341 B, 3rd Floor Hotel Ashok, Diplomatic Enclave, 50B Chankyapuri, New Delhi - 110021

Employer's Representative

Employer's Engineer
Programme Management Consultant (PMC)

AECOM

Preliminary Engineering Architecture Consultants (PEAC)

idom — Av. Del Monasterio de El Escorial, 4, 28049 Madrid, Spain

CPKUKREJA ARCHITECTS — No.D-1, Ashirwad Building, Green Park, New Delhi, Delhi 110016, India

EPC Contractor

L&T Construction — Buildings & Factories
Mount Poonamallee Road, Manapakkam, P.B.No.979, Chennai – 600 089

EPC Contractor's Representatives

Design Consultant
Engineering Design and Research Center (EDRC)
L&T Construction - Buildings & Factories

Architectural Consultant
Arcop Associates Pvt. Ltd.
A-15, Pampose Enclave , GA-I
New Delhi, Delhi 110048, India

Structural Proof Consultant
Indian Institute of Technology (IIT) Madras
Sardar Patel Rd, Opposite to C, L.R.I, Adyar, Chennai, Tamil Nadu 600036

MEP Proof Consultant
Egis India Consulting Engineers Pvt. Ltd.
Plot No. 66, Sector 32, Institutional Area, Opp: Zenotfa Solutions, Gurugram, Haryana 122001

ICT Proof Consultant
CKR Consulting Engineers Pvt. Ltd.
#47/1, 3rd Floor, Narayana Arcade, Subbaramachetty Road, Nettikappa Circle, Basavanagudi, Bengaluru - 560004

Certification

EPC Contractor

Design Consultant

Architectural Consultant

Proof Consultant

Structural — MEP — ICT

PEAC

Employer/EPC drawing [illegible] EPC Contractor and Design Consultant that all preliminary [illegible] parameters have been achieved to :

Issued by:

Employer / Employer's Engineer
Signed on behalf of PEAC: Date:

| REV | DESCRIPTION | DATE | DSGN | DRWN | CHKD | APPD |
|---|---|---|---|---|---|---|
| R0 | ISSUED AS GOOD FOR CONSTRUCTION | 16.01.19 | VNV | SEH | PBI | SPN |

Revisions

| | | | | | |
|---|---|---|---|---|---|
| ARCHITECTURE | | | FPS | | |
| STRUCTURAL | | | PIPING | | |
| ELECTRICAL | | | FHE | | |
| ELV SYSTEM | | | GIS | | |
| HVAC | | | GEOTECH. | | |
| CHECKED BY | SIGN | DATE | CHECKED BY | SIGN | DATE |

EPC Contractor
L&T Construction — Buildings & Factories

JOB No : O17203

Project Name
DESIGN AND CONSTRUCTION OF INDIA INTERNATIONAL CONVENTION & EXPO CENTRE
SECTOR 25, DWARKA, NEW DELHI, INDIA

Drawing Status
GOOD FOR CONSTRUCTION (GFC)

| Drawing No | | | Rev. No |
|---|---|---|---|
| F | 03 | 0009 | R0 |

Title :
**EXHIBITION HALL 3**
PIPING LAYOUT AND GENERAL ARRANGEMENT OF FIREFIGHTING PUMP AND SUMP AT PUMP ROOM

| EDRC DWG No : | Scale | Sheet Size |
|---|---|---|
| O17203 - F - SP - 03 - PL - 0009 | As indicated | A1 |

O17203 - F - SP - 03 - PL - 0009 (PIPING LAYOUT AND GENERAL ARRANGEMENT OF FIREFIGHTING PUMP AND SUMP AT PUMP ROOM)

This drawing is the property of L&T Construction, B&P-EDRC and must not be passed on to any person or body not authorised by us to receive it nor be copied or otherwise made use either in full or in part by such person or body without our prior permission in writing.

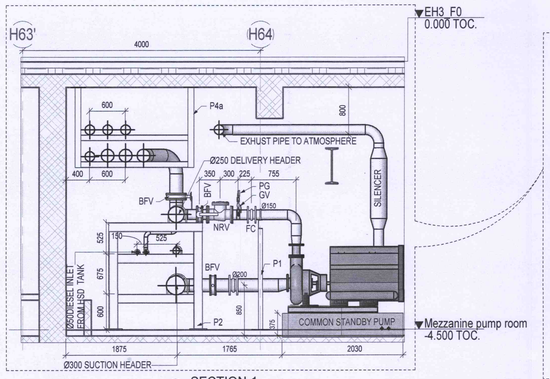


1 SECTION-1
1 : 50

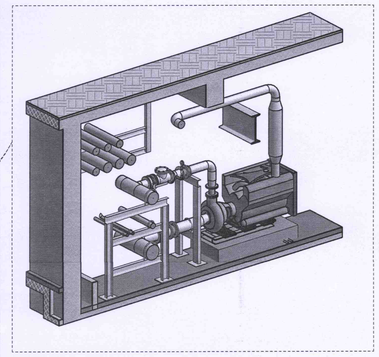

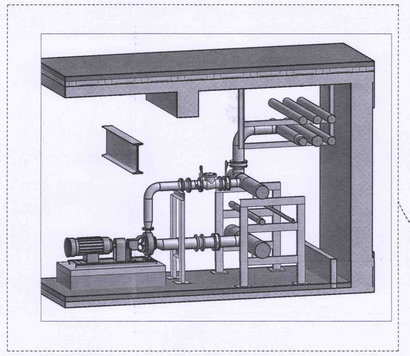

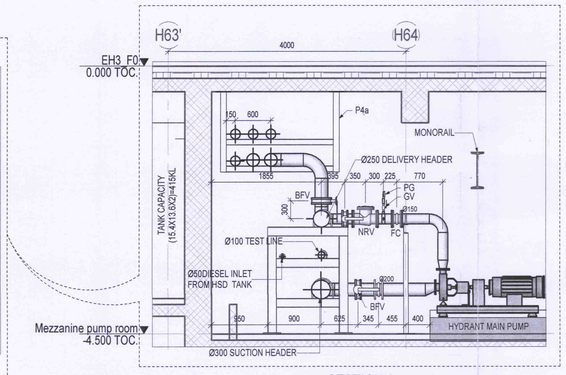


2 SECTION-2
1 : 50

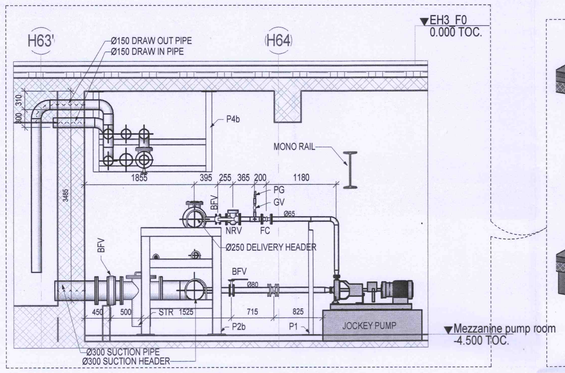


3 SECTION-3
1 : 50

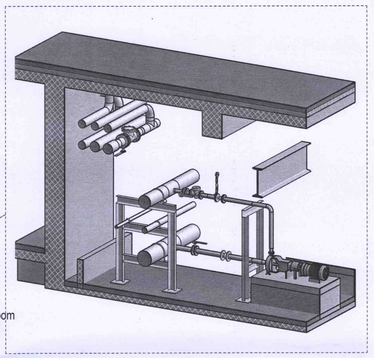

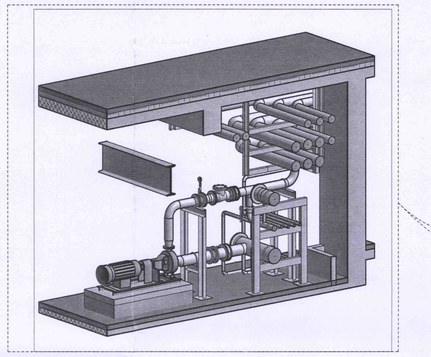

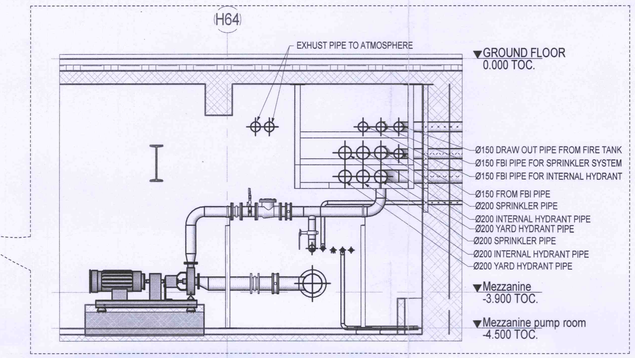


4 SECTION-4
1 : 50

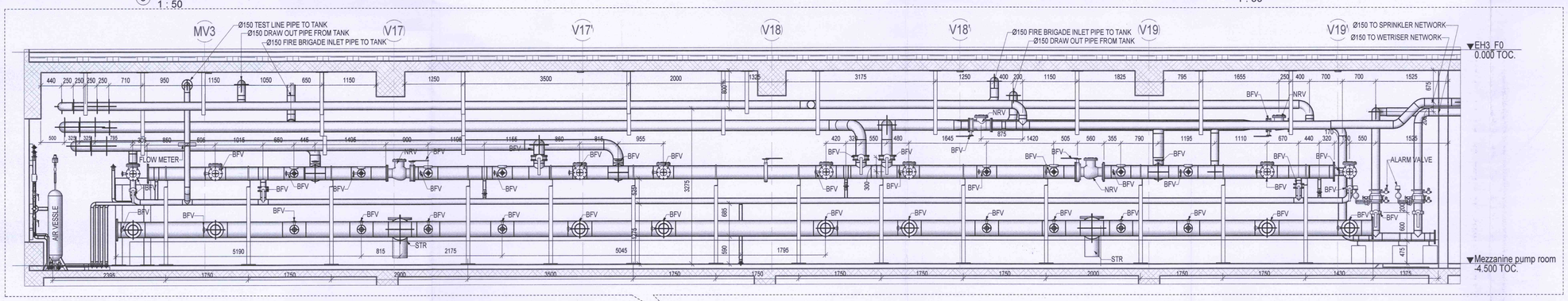


5 SECTION-5
1 : 50

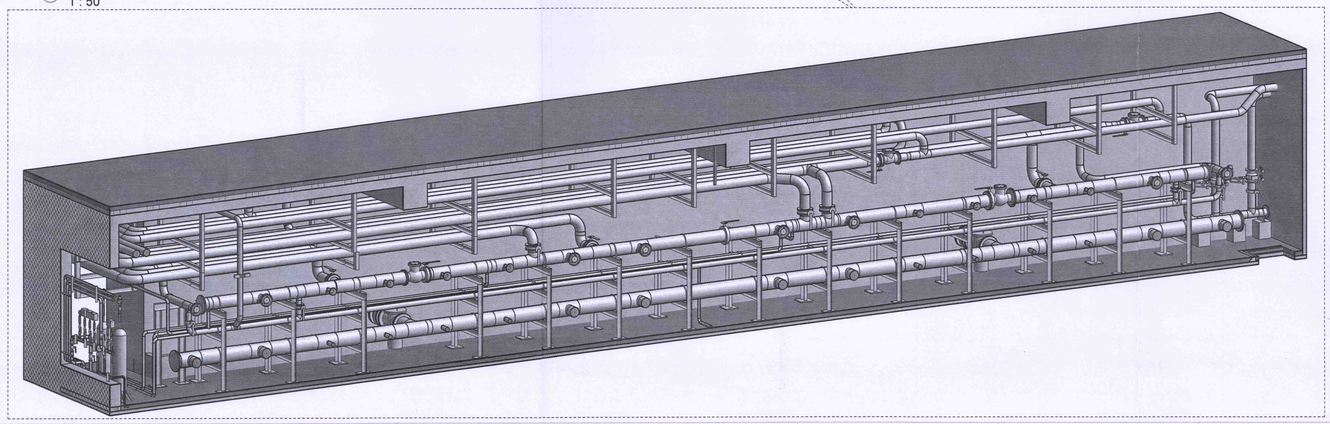

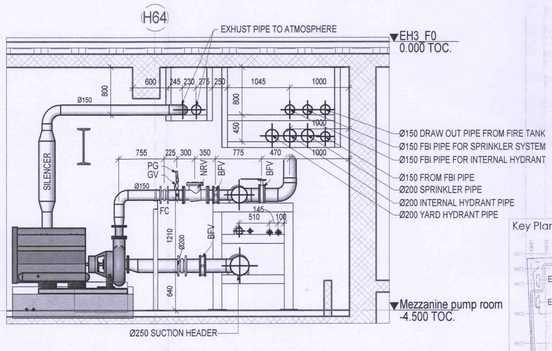


6 SECTION-6
1 : 50

Key Plan

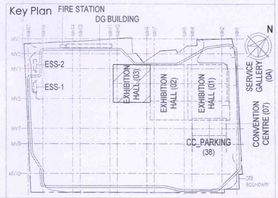


Owner / Employer

India International Convention & Exhibition Centre Limited
Room No. 402A, Ministry of Commerce & Industry, DIPP, Udyog Bhawan, New Delhi - 110011, India

Department of Industrial Policy and Promotion Ministry of Commerce & Industry Government of India

Knowledge Partner

Delhi Mumbai Industrial Corridor Development Corporation
Room No.341 B, 3rd Floor Hotel Ashok, Diplomatic Enclave, 50B Chankyapuri, New Delhi - 110021

Employer's Representative

Employer's Engineer

Programme Management Consultant (PMC)

AECOM

Preliminary Engineering Architecture Consultants (PEAC)

idom
Av. Del Monasterio de El Escorial, 4, 28049 Madrid, Spain

CPKUKREJA ARCHITECTS
No.D-1, Ashirwad Building, Green Park, New Delhi, Delhi 110016, India

EPC Contractor

L&T Construction
Buildings & Factories
Mount Poonamallee Road, Manapakkam, P.B.No.979, Chennai – 600 089

EPC Contractor's Representatives

Design Consultant
Engineering Design and Research Center (EDRC)
L&T Construction - Buildings & Factories

Architectural Consultant
ARCOP
Arcop Associates Pvt. Ltd.
A-15, Pampose Enclave , GK-I
New Delhi, Delhi 110048, India

Structural Proof Consultant
Indian Institute of Technology (IIT) Madras
Sardar Patel Rd, Opposite to C, L.R.I, Adyar, Chennai, Tamil Nadu 600036

MEP Proof Consultant
egis
Egis India Consulting Engineers Pvt. Ltd.
Plot No. 66, Sector 32, Institutional Area, Opp: Zenatix Solutions, Gurugram, Haryana 122001

ICT Proof Consultant
CKR
CKR Consulting Engineers Pvt. Ltd.
#47/1, 3rd Floor, Narayana Arcade, Subbaramachetty Road, Netkappa Circle, Basavanagudi, Bengaluru - 560004

Certification

EPC Contractor

Design Consultant

Architectural Consultant

Proof Consultant

Structural MEP ICT

PEAC Reviewed GFC drawing prepared by Contractor and confirm that all preliminary aspects and parameters are adhered to :

Issued by:
Employer / Employer's Engineer
Signature of PEAC Date:

| REV | DESCRIPTION | DATE | DSGN | DRWN | CHKD | APPD |
|---|---|---|---|---|---|---|
| R0 | ISSUED AS GOOD FOR CONSTRUCTION | 20.11.18 | VNV | SEH | PSI | SPN |

Revisions

| | | | | | |
|---|---|---|---|---|---|
| ARCHITECTURE | | | FPS | | |
| STRUCTURAL | | | PIPING | | |
| ELECTRICAL | | | PHE | | |
| ELV SYSTEM | | | GIS | | |
| HVAC | | | GEOTECH. | | |
| CHECKED BY | SIGN | DATE | CHECKED BY | SIGN | DATE |

EPC Contractor
L&T Construction
Buildings & Factories

JOB No : O17203

Project Name
DESIGN AND CONSTRUCTION OF INDIA INTERNATIONAL CONVENTION & EXPO CENTRE
SECTOR 25, DWARKA, NEW DELHI, INDIA

Drawing Status
GOOD FOR CONSTRUCTION (GFC)

| Drawing No | | | Rev. No |
|---|---|---|---|
| F | 03 | 0010 | R0 |

Title :
**EXHIBITION HALL 3**
SECTIONS OF FIREFIGHTING PUMP AND SUMP AT PUMP ROOM (SHEET 1 OF 2)

| EDRC DWG No : | Scale | Sheet Size |
|---|---|---|
| O17203 - F - SP - 03 - PL - 0010 | 1 : 50 | A1 |

O17203 - F - SP - 03 - PL - 0010 (SECTIONS OF FIREFIGHTING PUMP AND SUMP AT PUMP ROOM (SHEET 1 OF 2))

This drawing is the property of L&T Construction, E&F-EDRC and must not be passed on to any person or body not authorised by us to receive it nor be copied or otherwise made use either in full or in part by such person or body without our prior permission in writing.

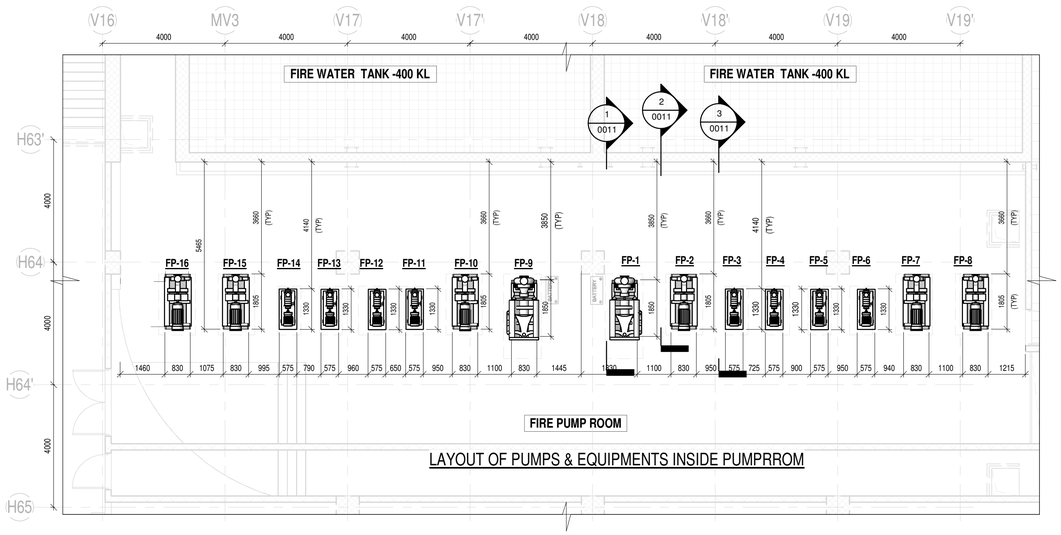


LAYOUT OF PUMPS & EQUIPMENTS INSIDE PUMPRROM

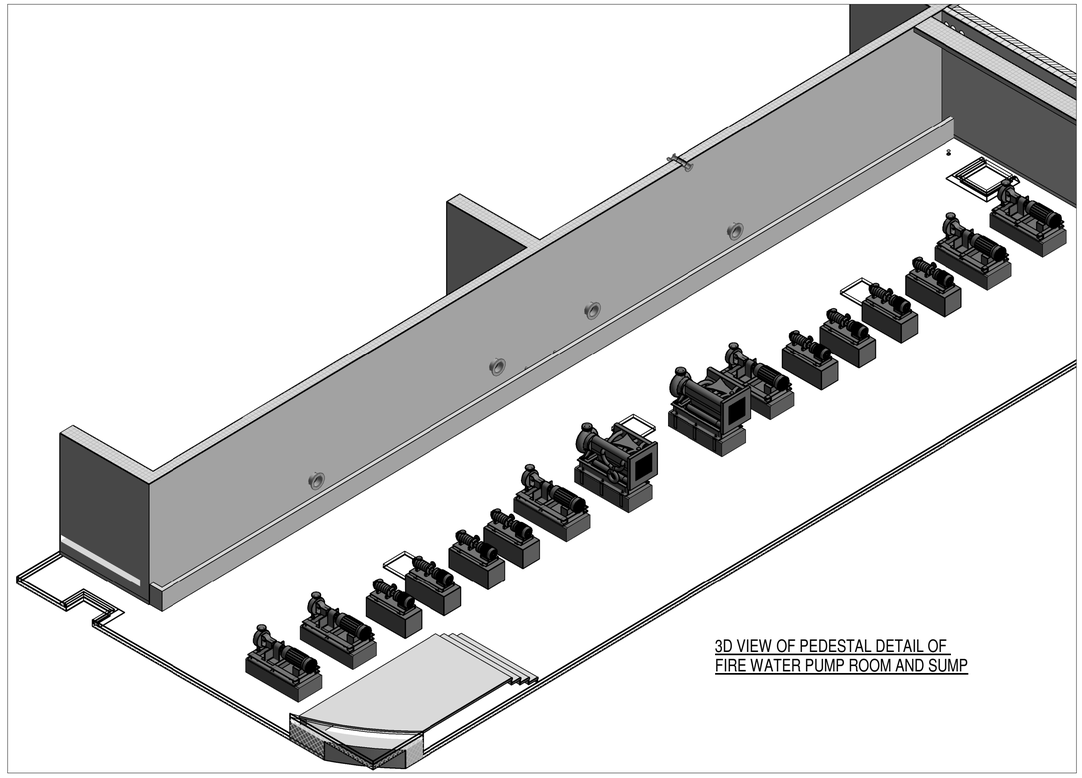

3D VIEW OF PEDESTAL DETAIL OF FIRE WATER PUMP ROOM AND SUMP

## PUMPS SCHEDULE

| SL. NO. | PUMP NO. | DESCRIPTION | SERVICE | CAPACITY (LPM) | HEAD MWC | No. OF PUMPS |
|---|---|---|---|---|---|---|
| 1. | FP-1/9 | COMMON STANDBY PUMP | COMMON SYSTEM | 2850 | 120 | 02 |
| 2. | FP-2/10 | MAIN PUMP | HYDRANT SYSTEM | 2850 | 120 | 02 |
| 3. | FP-3/4/11/12 | JOCKEY PUMP | HYDRANT SYSTEM | 280 | 120 | 04 |
| 4. | FP-5/6/13/14 | JOCKEY PUMP | SPRINKLER SYSTEM | 280 | 120 | 04 |
| 5. | FP-7/15 | MAIN PUMP | SPRINKLER SYSTEM | 2850 | 120 | 02 |
| 6. | FP-8/16 | MAIN PUMP | WATER CURTAIN SYSTEM | 2850 | 120 | 02 |

REVISION HISTORY :-

1 REVISED AS PER LATEST PUMP GA DRAWING

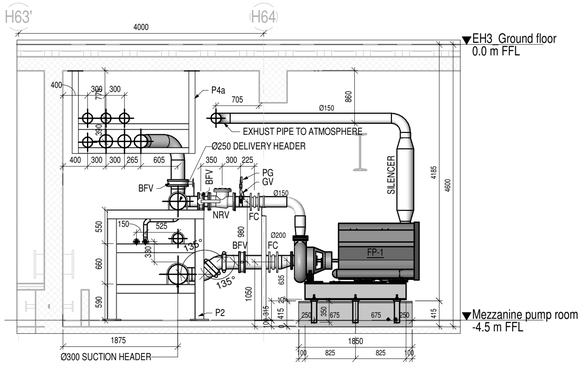


COMMON STANDBY PUMP

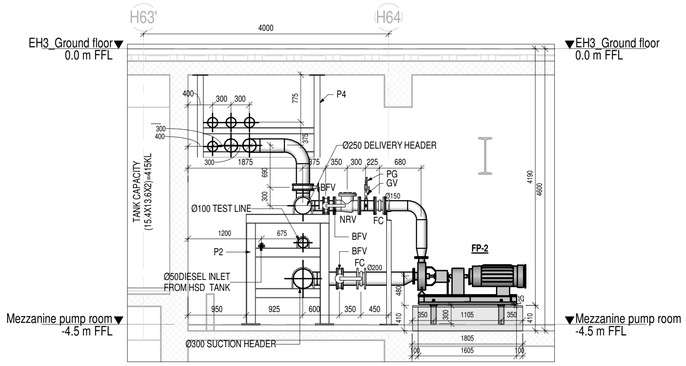


HYDRANT MAIN PUMP

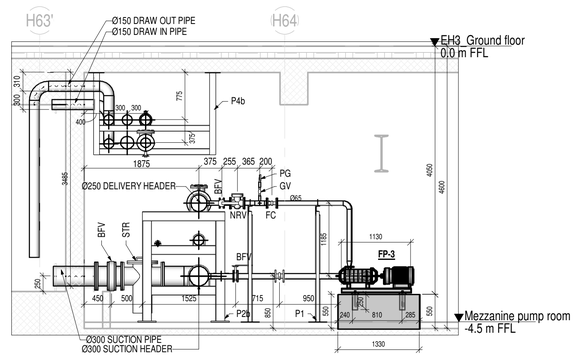


JOCKEY PUMP

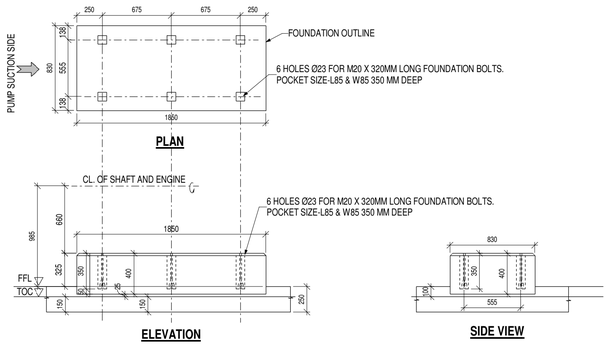


DIESEL ENGINE PUMP FOUNDATION DETAIL

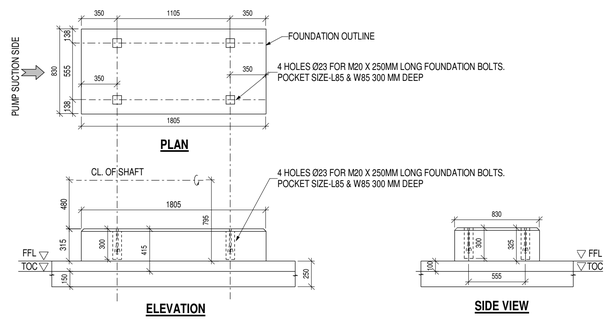


ELECTRICAL PUMPS FOUNDATION DETAIL

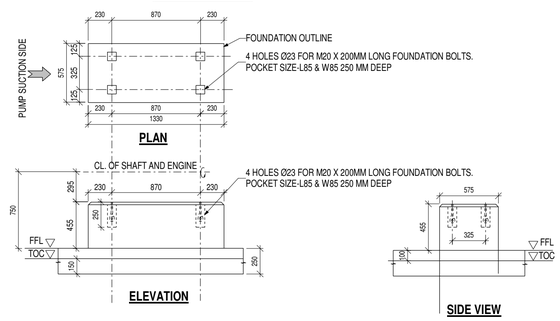


JOCKEY PUMP FOUNDATION DETAIL

Owner / Employer

India International Convention & Exhibition Centre Limited
Room No. 452A, Ministry of Commerce & Industry,
DIPP, Udyog Bhawan, New Delhi - 110011, India

Department of Industrial Policy and Promotion Ministry of Commerce & Industry Government of India

Knowledge Partner

Delhi Mumbai Industrial Corridor Development Corporation
Room No 341 B, 3rd Floor Hotel Ashok,
Diplomatic Enclave, 50B Chankyapuri,
New Delhi - 110021

Employer's Representative

Employer's Engineer

Programme Management Consultant (PMC)

AECOM

Preliminary Engineering Architecture Consultants (PEAC)

idom
Av. Del Monasterio de El Escorial, 4,
28049 Madrid, Spain

CPKUKREJA ARCHITECTS
No.D-1, Ashirwad Building, Green Park,
New Delhi, Delhi 110016, India

EPC Contractor

L&T Construction
Buildings & Factories
Mount Poonamallee Road, Manapakkam,
P.B.No.979, Chennai – 600 089

EPC Contractor's Representatives

Design Consultant
Engineering Design and Research Center (EDRC)
L&T Construction - Buildings & Factories

Architectural Consultant

ARCOP
Arcop Associates Pvt. Ltd.
A-15, Pamposie Enclave , G.K.-I
New Delhi, Delhi 110048, India

Structural Proof Consultant

Indian Institute of Technology (IIT) Madras
Sardar Patel Rd. Opposite to C, L.R.I, Adyar, Chennai,
Tamil Nadu 600036

MEP Proof Consultant

egis
Egis India Consulting Engineers Pvt. Ltd.
Plot No. 66, Sector 32, Institutional Area,
Opp: Zenatix Solutions, Gurugram,
Haryana 122001

ICT Proof Consultant

CKR CONSULTING ENGINEERS
CKR Consulting Engineers Pvt. Ltd.
#47/1, 3rd Floor, Narayana Arcade,
Subbaramachetty Road, Nelkalappa Circle,
Basavanagudi, Bengaluru - 560004

Certification

EPC Contractor

Design Consultant

Architectural Consultant

Proof Consultant

| Structural | MEP | ICT |
|---|---|---|
| | | |

PEAC

Issued by:
Employer / Employer's Engineer

| REV | DESCRIPTION | DATE | DSGN | DRWN | CHKD | APPD |
|---|---|---|---|---|---|---|
| R1 | REVISED AS PER REVISION HISTORY-1 AND ISSUED AS GOOD FOR CONSTRUCTION | 08.09.20 | VNV | VNV | PBI/SNA | SPN |

Revisions

| | | | | | |
|---|---|---|---|---|---|
| ARCHITECTURE | | | FPS | | |
| STRUCTURAL | | | PIPING | | |
| ELECTRICAL | | | PHE | | |
| ELV SYSTEM | | | GAS | | |
| HVAC | | | GEOTECH. | | |
| CHECKED BY | SIGN | DATE | CHECKED BY | SIGN | DATE |

EPC Contractor
L&T Construction
Buildings & Factories

JOB No : O17203

Project Name
DESIGN AND CONSTRUCTION OF INDIA INTERNATIONAL CONVENTION & EXPO CENTRE
SECTOR 25, DWARKA, NEW DELHI, INDIA

Drawing Status
GOOD FOR CONSTRUCTION (GFC)

| Drawing No | | | Rev. No |
|---|---|---|---|
| F | 03 | 0011 | R1 |

Title :
**EXHIBITION HALL 3**
LAYOUT OF PUMPS & EQUIPMENTS INSIDE PUMP ROOM

| EDRC DWG No : | Scale | Sheet Size |
|---|---|---|
| O17203 - F - SP - 03 - GA - 0011 | As indicated | A1 |

O17203 - F - SP - 03 - GA - 0011 (LAYOUT OF PUMPS & EQUIPMENTS INSIDE PUMP ROOM)

This drawing is the property of L&T Construction. B&F-EDRC and must not be passed on to any person or body not authorised by us to receive it nor be copied or otherwise made use either in full or in part by such person or body without our prior permission in writing.

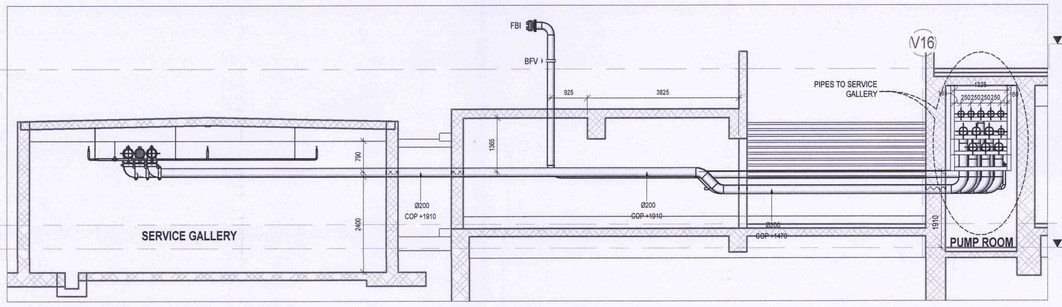


1 SECTION-7
1 : 75

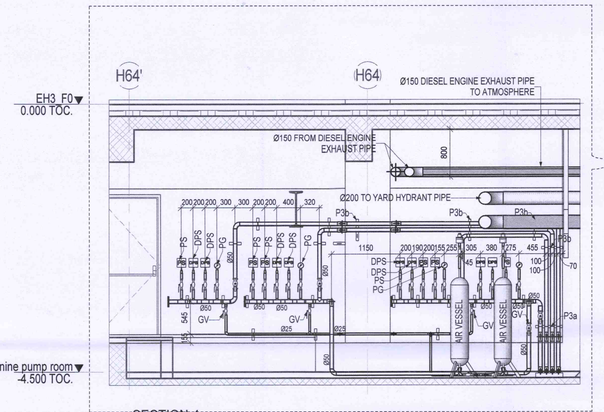


7 SECTION-4
1 : 50

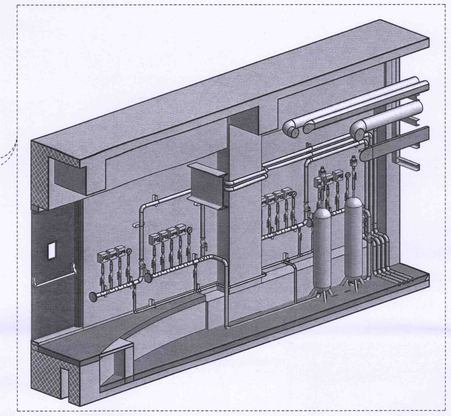

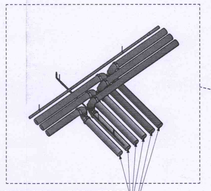


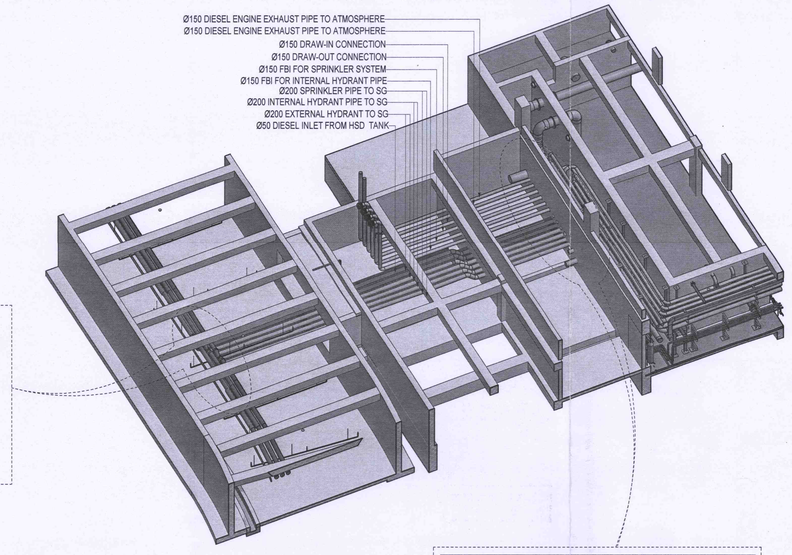


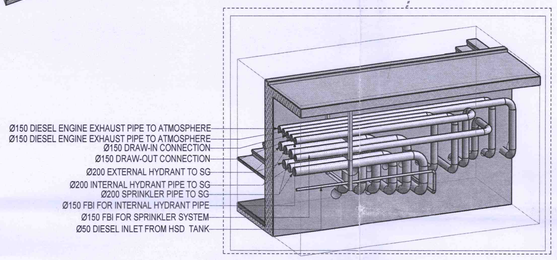


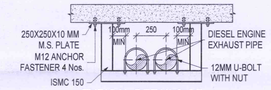


TYPICAL DETAILS OF PIPE SUPPORT-5 (P5)

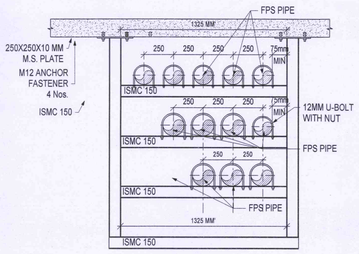


TYPICAL DETAILS OF PIPE SUPPORT-6 (P6)

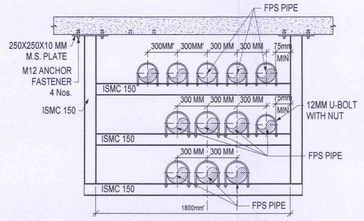


TYPICAL DETAILS OF PIPE SUPPORT-4 (P4)

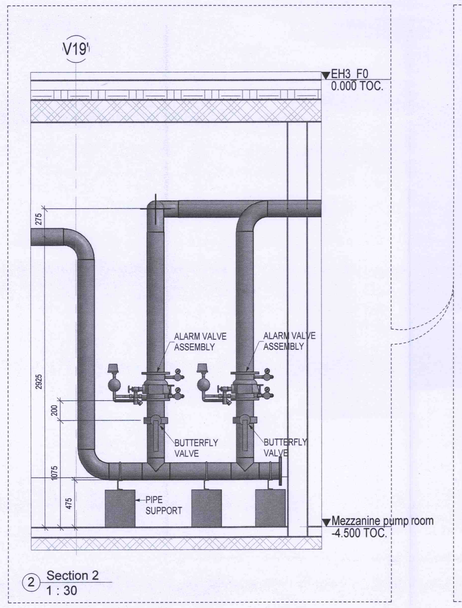


2 Section 2
1 : 30

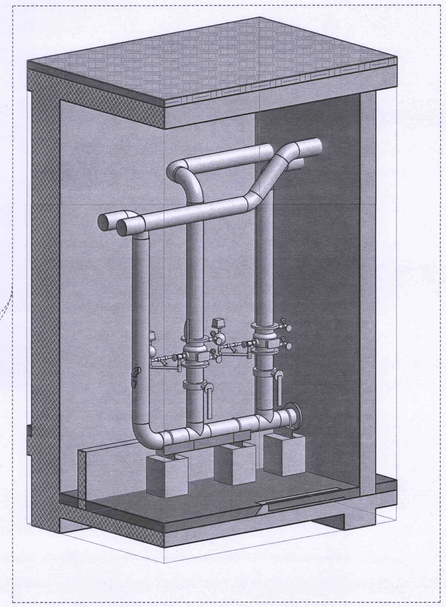

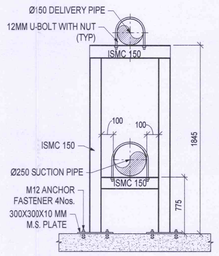


TYPICAL DETAILS OF PIPE SUPPORT-1 (P1)

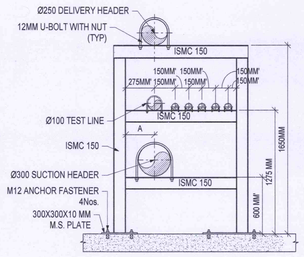


TYPICAL DETAILS OF PIPE SUPPORT-2 (P2)

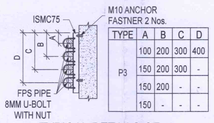


| TYPE | A | B | C | D |
|---|---|---|---|---|
| P3 | 100 | 200 | 300 | 400 |
| | 150 | 200 | 300 | - |
| | 150 | 200 | - | - |
| | 150 | - | - | - |

TYPICAL DETAILS OF PIPE SUPPORT-3 (P3)

Key Plan

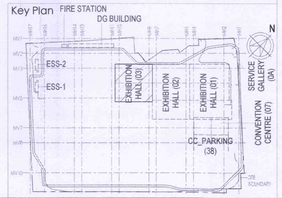


Owner / Employer

India International Convention & Exhibition Centre Limited
Room No. 452A, Ministry of Commerce & Industry, DIPP, Udyog Bhawan, New Delhi - 110011, India

Department of Industrial Policy and Promotion Ministry of Commerce & Industry Government of India

Knowledge Partner

Delhi Mumbai Industrial Corridor Development Corporation
Room No 341 B, 3rd Floor Hotel Ashok, Diplomatic Enclave, 50B Chankyapuri, New Delhi - 110021

Employer's Representative

Employer's Engineer

Programme Management Consultant (PMC)

AECOM

Preliminary Engineering Architecture Consultants (PEAC)

idom — Av. Del Monasterio de El Escorial, 4, 28049 Madrid, Spain

CPKUKREJA ARCHITECTS — No.D-1, Ashirwad Building, Green Park, New Delhi, Delhi 110016, India

EPC Contractor

L&T Construction Buildings & Factories
Mount Poonamallee Road, Manapakkam, P.B.No.979, Chennai – 600 089

EPC Contractor's Representatives

Design Consultant
Engineering Design and Research Center (EDRC)
L&T Construction - Buildings & Factories

Architectural Consultant
Arcop Associates Pvt. Ltd.
A-15, Pampose Enclave , G.K.-1
New Delhi, Delhi 110048, India

Structural Proof Consultant
Indian Institute of Technology (IIT) Madras
Sardar Patel Rd, Opposite to C. L.R.I, Adyar, Chennai, Tamil Nadu 600036

MEP Proof Consultant
Egis India Consulting Engineers Pvt. Ltd.
Plot No. 66, Sector 32, Institutional Area, Opp: Zenatix Solutions, Gurugram, Haryana 122001

ICT Proof Consultant
CKR Consulting Engineers Pvt. Ltd.
#47/1, 3rd Floor, Narayana Arcade, Subbaramachetty Road, Nelkalappa Circle, Basavanagudi, Bengaluru - 560004

Certification

EPC Contractor

Design Consultant

Architectural Consultant

Proof Consultant

Structural | MEP | ICT

PEAC — Reviewed GFC drawing prepared by Contractor and ensured that all performance aspects and parameters have been achieved.

Issued by:
Employer / Employer's Engineer of PEAC — Date:

| REV | DESCRIPTION | DATE | DSGN | DRWN | CHKD | APPD |
|---|---|---|---|---|---|---|
| R0 | ISSUED AS GOOD FOR CONSTRUCTION | 09.11.18 | VNV | SEH | PBI | LSPN |

Revisions

| | | | | | |
|---|---|---|---|---|---|
| ARCHITECTURE | | | FPS | | |
| STRUCTURAL | | | PIPING | | |
| ELECTRICAL | | | PHE | | |
| ELV SYSTEM | | | GIS | | |
| HVAC | | | GEOTECH. | | |
| CHECKED BY | SIGN | DATE | CHECKED BY | SIGN | DATE |

EPC Contractor
L&T Construction Buildings & Factories

JOB No : O17203

Project Name
DESIGN AND CONSTRUCTION OF INDIA INTERNATIONAL CONVENTION & EXPO CENTRE
SECTOR 25, DWARKA, NEW DELHI, INDIA

Drawing Status
GOOD FOR CONSTRUCTION (GFC)

| Drawing No | | | Rev. No |
|---|---|---|---|
| F | 03 | 0012 | R0 |

Title :
**EXHIBITION HALL 3**
SECTIONS OF FIREFIGHTING PUMP AND SUMP AT PUMP ROOM (SHEET 2 OF 2)

| EDRC DWG No : | Scale | Sheet Size |
|---|---|---|
| O17203 - F - SP - 03 - PL - 0012 | As indicated | A1 |

O17203 - F - SP - 03 - PL - 0012 (SECTIONS OF FIREFIGHTING PUMP AND SUMP AT PUMP ROOM (SHEET 2 OF 2))

This drawing is the property of L&T Construction. B&F-EDRC and must not be passed on to any person or body not authorised by us to receive it nor be copied or otherwise made use either in full or in part by such person or body without our prior permission in writing.

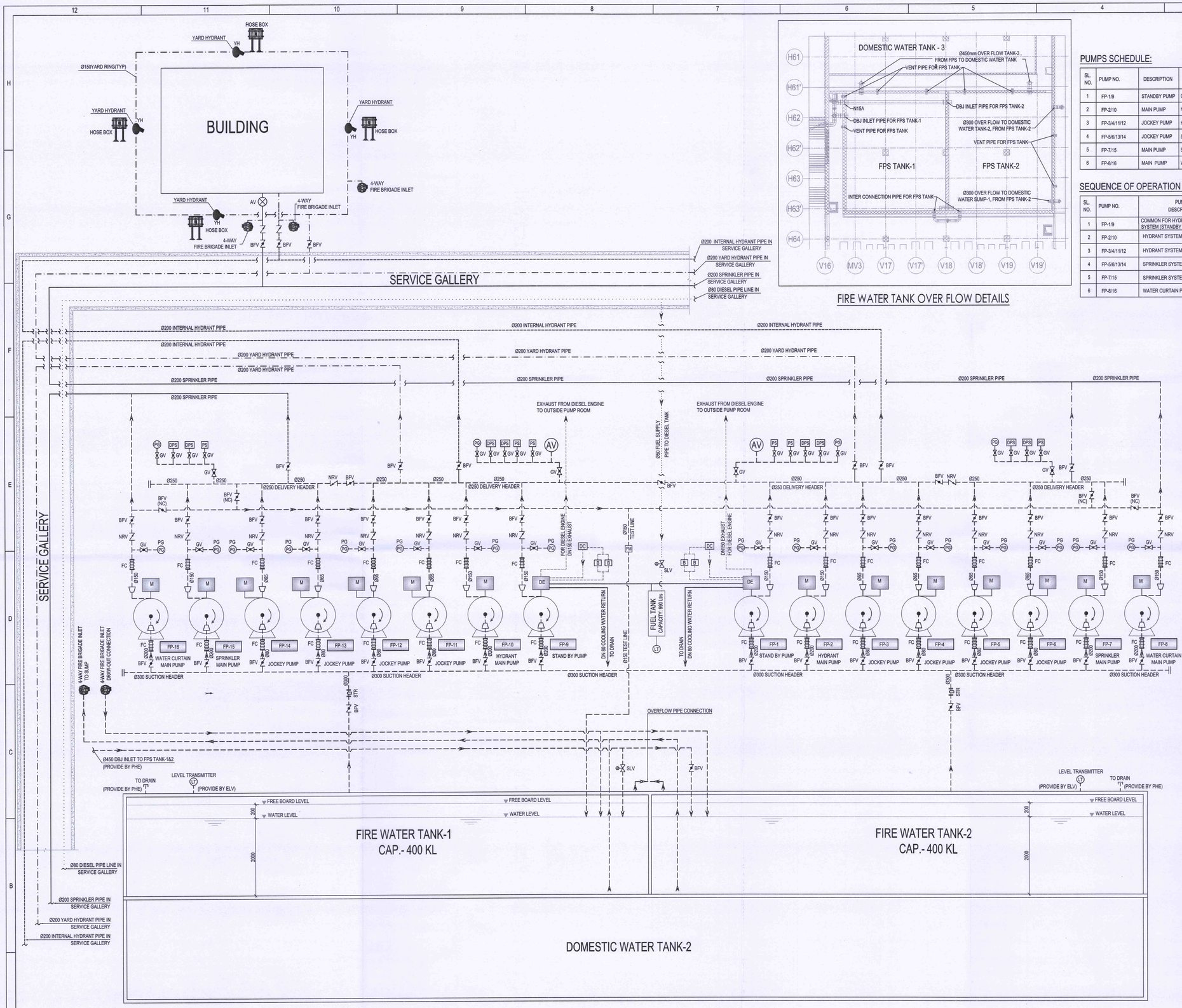


SCHEMATIC DIAGRAM OF FIRE FIGHTING PUMP AND SUMP AT PUMP ROOM




FIRE WATER TANK OVER FLOW DETAILS

## PUMPS SCHEDULE:

| SL. NO. | PUMP NO. | DESCRIPTION | SERVICE | RATE OF FLOW ( LPM ) | HEAD ( MWC ) | QUANTITY ( NOS. ) |
|---|---|---|---|---|---|---|
| 1 | FP-1/9 | STANDBY PUMP | COMMON | 2850 | 120 | 02 |
| 2 | FP-2/10 | MAIN PUMP | HYDRANT SYSTEM | 2850 | 120 | 02 |
| 3 | FP-3/4/11/12 | JOCKEY PUMP | HYDRANT SYSTEM | 280 | 120 | 04 |
| 4 | FP-5/6/13/14 | JOCKEY PUMP | SPRINKLER SYSTEM | 280 | 120 | 04 |
| 5 | FP-7/15 | MAIN PUMP | SPRINKLER SYSTEM | 2850 | 120 | 02 |
| 6 | FP-8/16 | MAIN PUMP | WATER CURTAIN SYSTEM | 2850 | 120 | 02 |

## SEQUENCE OF OPERATION FOR FIRE PUMPS

| SL. NO. | PUMP NO. | PUMP DESCRIPTION | START PRESSURE | STOP PRESSURE |
|---|---|---|---|---|
| 1 | FP-1/9 | COMMON FOR HYDRANT & SPRINKLER SYSTEM (STANDBY PUMP) | 6 BAR | - |
| 2 | FP-2/10 | HYDRANT SYSTEM (MAIN PUMP) | 9 BAR | - |
| 3 | FP-3/4/11/12 | HYDRANT SYSTEM (JOCKEY PUMP) | 11 BAR | 12 BAR |
| 4 | FP-5/6/13/14 | SPRINKLER SYSTEM (JOCKEY PUMP) | 10 BAR | 12 BAR |
| 5 | FP-7/15 | SPRINKLER SYSTEM (MAIN PUMP) | 8 BAR | - |
| 6 | FP-8/16 | WATER CURTAIN PUMP | AT THE TIME OF WATER CURTAIN SYSTEM OPERATES | |

## LEGEND:

| Sl. No. | SYMBOL | DESCRIPTION |
|---|---|---|
| 1 | M | ELECTRICALLY OPERATED PUMPSET |
| 2 | DE | DIESEL ENGINE OPERATED PUMPSET |
| 3 | PS | PRESSURE SWITCH |
| 4 | DPS | DIFFERENTIAL PRESSURE SWITCH |
| 5 | PG | PRESSURE GAUGE |
| 6 | | SINGLE HEADED YARD HYDRANT VALVE |
| 7 | | PEDASTAL MOUNTED TYPE HOSE BOX |
| 8 | | BUCKET TYPE STRAINER |
| 9 | | BLIND FLANGE |
| 10 | | GLOBE VALVE |
| 11 | (NC) | BUTTERFLY VALVE (NORMALLY CLOSED) |
| 12 | | NON-RETURN VALVE |
| 13 | | BUTTERFLY VALVE |
| 14 | | REDUCER |
| 15 | M | MOTOR |
| 16 | DE | DIESEL ENGINE |
| 17 | | 4 - WAY FIRE BRIGADE INLET |
| 18 | AV | AIR VESSEL |
| 19 | B | BATTERY |
| 20 | LI | LEVEL INDICATOR |
| 21 | LT | LEVEL TRANSMITTER |
| 22 | FM | FLOW METER |
| 23 | AV | ALARM VALVE |
| 24 | SLV | SOLENOID VALVE |

## NOTES :

1. THE FIRE WATER SYSTEM IS DESIGNED AS PER NBC-PART IV 2016 AND RELEVANT INDIAN STANDARDS
2. POSITIVE SUCTION PUMPING ARRANGEMENT IS CONSIDERED
3. ALL VALVES SHALL BE LOCK OPEN POSITION EXCEPT DRAIN VALES & TEST LINE VALVES
4. FOR AIR VESSEL DETAILS AND FIRE BRIGADE INLETS/DRAW OFF CONNECTIONS, REFER PUMP ROOM DRAWINGS.

Key Plan

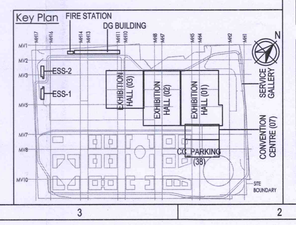


Owner / Employer

India International Convention & Exhibition Centre Limited
Room No. 452A, Ministry of Commerce & Industry, DIPP, Udyog Bhawan, New Delhi - 110011, India

Department of Industrial Policy and Promotion Ministry of Commerce & Industry Government of India

Knowledge Partner

Delhi Mumbai Industrial Corridor Development Corporation
Room No 341 B, 3rd Floor Hotel Ashok, Diplomatic Enclave, 50B Chankyapuri, New Delhi - 110021

Employer's Representative

Employer Engineer
Programme Management Consultant (PMC)

AECOM

Preliminary Engineering Architecture Consultants (PEAC)

idom — Av. Del Monasterio de El Escorial, 4, 28049 Madrid, Spain

cpka CPKUKREJA ARCHITECTS — No.D-1, Ashirwad Building, Green Park, New Delhi, Delhi 110016, India

EPC Contractor

L&T Construction Buildings & Factories
Mount Poonamallee Road, Manapakkam, P.B.No.979, Chennai – 600 089

EPC Contractor's Representatives

Design Consultant
Engineering Design and Research Center (EDRC)
L&T Construction - Buildings & Factories

Architectural Consultant

ARCOP — Arcop Associates Pvt. Ltd.
A-15, Pampose Enclave , G.K.-I
New Delhi, Delhi 110048, India

Structural Proof Consultant

Indian Institute of Technology (IIT) Madras
Sardar Patel Rd. Opposite to C. L.R.I. Adyar, Chennai, Tamil Nadu 600036

MEP Proof Consultant

egis — Egis India Consulting Engineers Pvt. Ltd.
Plot No. 66, Sector 32, Institutional Area, Opp: Zenotfe Solutions, Gurugram, Haryana 122001

ICT Proof Consultant

CKR — CKR Consulting Engineers Pvt. Ltd.
#47/1, 3rd Floor, Narayana Arcade, Subbaramochetty Road, Netkappa Circle, Basavanagudi, Bengaluru - 560004

Certification

EPC Contractor

Design Consultant

Architectural Consultant

Proof Consultant

Structural | MEP | ICT

PEAC — Reviewed GFC drawing prepared by Contractor and [illegible] all preliminary aspects and parameters have been [illegible] to :

Issued by:

Employer / Employer's Engineer — Date:

| REV | DESCRIPTION | DATE | DSGN | DRWN | CHKD | APPD |
|---|---|---|---|---|---|---|
| R0 | ISSUED AS GOOD FOR CONSTRUCTION | 16.01.19 | VNV | SNL | PBI | SPN |

Revisions

| | | | | | |
|---|---|---|---|---|---|
| ARCHITECTURE | | | FPS | | |
| STRUCTURAL | | | PIPING | | |
| ELECTRICAL | | | PHE | | |
| ELV SYSTEM | | | GIS | | |
| HVAC | | | GEOTECH. | | |
| CHECKED BY | SIGN | DATE | CHECKED BY | SIGN | DATE |

EPC Contractor
L&T Construction Buildings & Factories

JOB No : O17203

Project Name
DESIGN AND CONSTRUCTION OF INDIA INTERNATIONAL CONVENTION & EXPO CENTRE
SECTOR 25, DWARKA, NEW DELHI, INDIA

Drawing Status
GOOD FOR CONSTRUCTION (GFC)

| Drawing No | | | Rev. No |
|---|---|---|---|
| F | 03 | 0013 | R0 |

Title :
**EXHIBITION HALL - 3**
SERVICE BUILDING:
P&ID FOR FIRE FIGHTING PUMP

| EDRC DWG No : | Scale : | Sheet Size |
|---|---|---|
| O17203 - F - SP - 03 - PI - 0013 | As Indicated | A1 |

This drawing is the property of L&T Construction, B&E-EDRC and must not be passed on to any person or body not authorised by us to receive it nor be copied or otherwise made use either in full or in part by such person or body without our prior permission in writing.

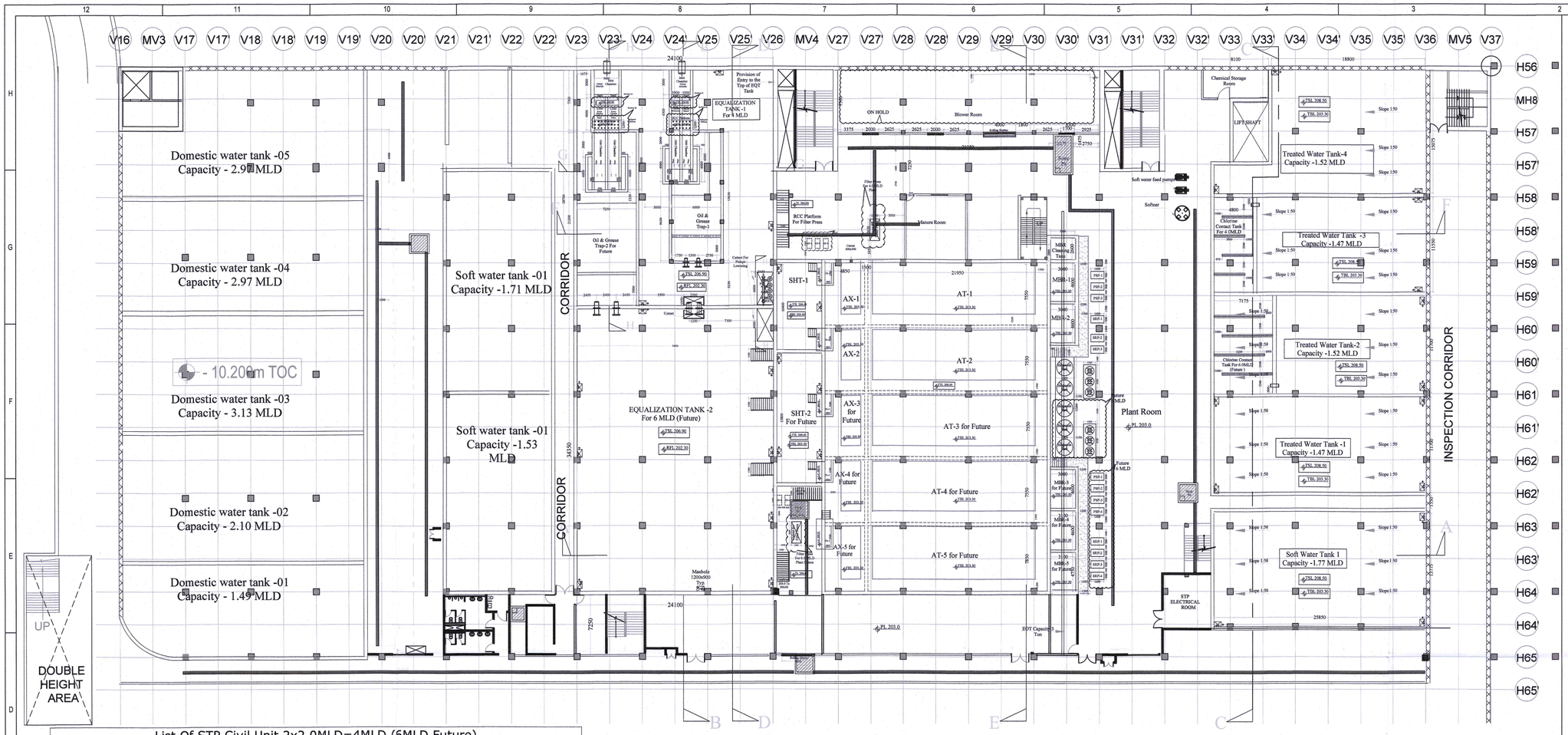


## List Of STP Civil Unit 2x2.0MLD=4MLD (6MLD Future)

| Mark | Description | Area | Length (M) | Width (M) | Height (M) | Water Depth (M) | Phase -1 Volume ($M^3$) | Phase -2 Volume ($M^3$) |
|---|---|---|---|---|---|---|---|---|
| IC | Inlet Chamber | 0.0 | 3.0 | 3.0 | 2.1 | 0.5 | 4.50 | |
| SC-1 | Screen Chamber-1 | 0.0 | 4.0 | 1.0 | 0.8 | | 0.00 | |
| SC-2 | Screen Chamber-2 | 0.0 | 4.0 | 1.0 | 0.8 | | | |
| O&GT-1 | Oil & Grease Trap-1 | | 15.65 | 6.0 | 2.85 | 1.5 | 140.85 | |
| O&GT-2 | Oil & Grease Trap For-2 Future | | 21.20 | 7.25 | 2.85 | 1.5 | | 230.55 |
| EQT-1 | Equalization Tank-1 | 690.2350 | 28.70 | 24.05 | 4.15 | 3.1 | 2139.73 | |
| | Total EQT Vol 2089 including O&G, Actual vol-1653 m3 | | | | | | 0.00 | |
| EQT-2 | Equalisation Tank-2 For Future | 0.0 | 34.350 | 23.40 | 4.15 | 3.1 | | 2491.75 |
| AX-1 | Anoxic Tank-1 | | 4.85 | 7.6 | 5.75 | 5.0 | 184.30 | |
| AX-2 | Anoxic Tank-2 | | 4.85 | 7.6 | 5.75 | 5.0 | 184.30 | |
| AX-3 | Anoxic Tank-3 For Future | | 4.85 | 7.6 | 5.75 | 5.0 | | 184.30 |
| AX-4 | Anoxic Tank-4 For Future | | 4.85 | 7.6 | 5.75 | 5.0 | | 184.30 |
| AX-5 | Anoxic Tank-5 For Future | | 4.85 | 7.950 | 5.75 | 5.0 | | 192.79 |
| AT-1 | Aeration Tank-1 | | 22.0 | 7.6 | 5.75 | 4.8 | 802.56 | |
| AT-2 | Aeration Tank-2 | | 22.0 | 7.6 | 5.75 | 4.8 | 802.56 | |
| AT-3 | Aeration Tank-3 for Future | | 22.0 | 7.6 | 5.75 | 4.8 | | 802.56 |
| AT-4 | Aeration Tank-4 for Future | | 22.0 | 7.6 | 5.75 | 4.8 | | 802.56 |
| AT-5 | Aeration Tank-5 for Future | | 22.0 | 7.950 | 5.75 | 4.8 | | 839.52 |
| MBR-1 | MBR Tank-1 | | 3.1 | 4.70 | 4.0 | 3.6 | 52.45 | |
| MBR-2 | MBR Tank-2 | | 3.1 | 4.75 | 4.0 | 3.6 | 53.01 | |
| MBR-3 | MBR Tank-3 For future | | 3.1 | 4.7 | 4.0 | 3.6 | | 52.45 |
| MBR-4 | MBR Tank-4 For future | | 3.1 | 4.75 | 4.0 | 3.6 | | 53.01 |
| MBR-5 | MBR Tank-5 For future | | 3.1 | 4.75 | 4.0 | 3.6 | | 53.01 |
| SHT-1 | Sludge Holding Tank-1 | | 10.60 | 5.5 | 5.550 | 4.6 | 268.18 | |
| SHT-2 | Sludge Holding Tank-2 for Future | | 15.8 | 5.5 | 5.550 | 4.6 | | 399.74 |
| CCT | Chlorine Contact Tank(For 4.0 MLD ) | | 4.8 | 11.70 | 2.3 | 1.8 | 101.09 | |
| CCT | Chlorine Contact Tank(For 6.0 MLD ) | | 7.2 | 11.70 | 2.3 | 1.8 | 151.63 | |

## Abbreviation

| Mark | Description |
|---|---|
| PL | Plant Room Level |
| RFL | Raft Floor Level |
| TTL | Tank Top Level |
| TBL | Tank Bottom Level |

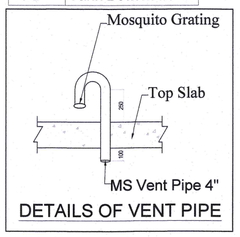


DETAILS OF VENT PIPE

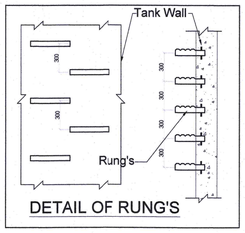


DETAIL OF RUNG'S

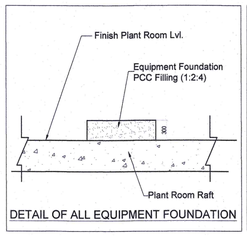


DETAIL OF ALL EQUIPMENT FOUNDATION

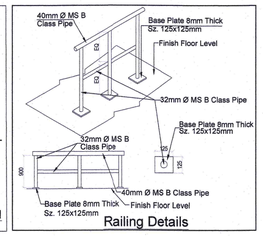


Railing Details

## NOTES

1. Refer DWG Number O17203-U-SP-03-IP-0010,11,12,15 For Domestic and Treated Water Sump and Pump room Details
2. Refer Drawing Number O17203-V-SP-03-VS-0007, O17203-V-SP-03-VS-0008,O17203-V-SP-03-VS-0001 for Mechanical Ventilation Details.
3. Refer Drawing Number O17203-EE-SP-03-EE-0005 Electrical Cable tray details

Key Plan

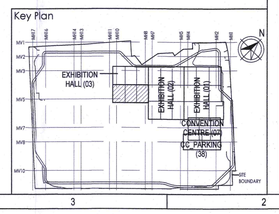


India International Convention & Exhibition Centre Limited
Room No. 452A, Ministry of Commerce & Industry, DIPP, Udyog Bhawan, New Delhi - 110011, India

Department of Industrial Policy and Promotion Ministry of Commerce & Industry Government of India

Knowledge Partner
Delhi-Mumbai Industrial Corridor Development Corporation
Room No 341 B, 3rd Floor Hotel Ashok, Diplomatic Enclave, 50B Chankyapuri, New Delhi - 110021

Employer Engineer
Programme Management Consultant (PMC)
AECOM

Preliminary Engineering Architecture Consultants (PEAC)
idom — Av. Del Monasterio de El Escorial, 4, 28049 Madrid, Spain
CPKUKREJA ARCHITECTS — No.D-1, Ashirwad Building, Green Park, New Delhi, Delhi 110016, India

L&T Construction Buildings & Factories
Mount Poonamallee Road, Manapakkam, P.B.No.979, Chennai – 600 089

Design Consultant
Engineering Design and Research Center (EDRC)
L&T Construction - Buildings & Factories

Architectural Consultant
ARCOP — Arcop Associates Pvt. Ltd.
A-15, Pamposh Enclave, , G.K-1
New Delhi, Delhi 110048, India

Structural Proof Consultant
Indian Institute of Technology (IIT) Madras
Sardar Patel Rd, Opposite to C. L.R.I, Adyar, Chennai, Tamil Nadu 600036

MEP Proof Consultant
egis — Egis India Consulting Engineers Pvt. Ltd.
Plot No. 66, Sector 32, Institutional Area, Opp: Zenoffs Solutions, Gurugram, Haryana 122001

ICT Proof Consultant
CKR — CKR Consulting Engineers Pvt. Ltd.
#47/1, 3rd Floor, Narayana Arcade, Subbaramachetty Road, Nehkalappa Circle, Basavanagudi, Bengaluru - 560004

**Certification**

EPC Contractor
Design Consultant
Architectural Consultant
Proof Consultant
Structural | MEP | ICT
PEAC
Issued by: Signature on behalf of PEAC
Employer / Employer's Engineer

| REV | DESCRIPTION | DATE | DSGN | DRWN | CHKD | APPD |
|---|---|---|---|---|---|---|
| R0 | ISSUED AS GOOD FOR CONSTRUCTION DRAWING | 28.02.20 | KCB | MC | SUMU | AGJ |

Revisions

| | | | | | |
|---|---|---|---|---|---|
| ARCHITECTURE | | | FPS | | |
| STRUCTURAL | | | PIPING | | |
| ELECTRICAL | | | PHE | | |
| ELV SYSTEM | | | GIS | | |
| HVAC | | | GEOTECH. | | |
| CHECKED BY | SIGN | DATE | CHECKED BY | SIGN | DATE |

EPC Contractor
L&T Construction Buildings & Factories

JOB No : O17203

Project Name
DESIGN AND CONSTRUCTION OF INDIA INTERNATIONAL CONVENTION & EXPO CENTRE
SECTOR 25, DWARKA, NEW DELHI, INDIA

Drawing Status: GOOD FOR CONSTRUCTION (GFC)

| Drawing No | | | Rev. No |
|---|---|---|---|
| U | 03 | 0001 | R0 |

Title :
EXHIBITION HALL -03
Sewage treatment plant layout

EDRC DWG No : O17203-U-SP-03-ST-0001
Scale : NTS
Sheet Size : A1

This drawing is the property of L&T Construction, B&F-EDRC and must not be passed on to any person or body not authorised by us to receive it nor be copied or otherwise reduce use either in full or in part by such person or body without our prior permission in writing.